3A, 4V to 32V, 600kHz COT Synchronous Step-Down Converter

Features

- 4V to 32V operating input voltage range
- 3A continuous output current
- 600kHz switching frequency
- Hiccup-mode short-circuit protection
- Built-in overcurrent limit
- Internal soft start
- Low internal MOSFET on-resistance, $R_{DS(ON)}$: 140mΩ (high side) and 90mΩ (low side)
- Output adjustable from 0.925V
- Low EMI signature
- Maximum duty cycle: 100%
- Thermal shutdown
- Constant-on-time (COT) control
- SOP-8(EP) package

Applications

- Automotive entertainment
- Wireless and DSL modems
- Computer entertainment
- IoT applications
- Digital still and video cameras

General Description

The HCR3233 is a high-efficiency, monolithic synchronous step-down DC/DC converter. It operates from a 4V to 32V input and delivers up to 3A of continuous output current. The device draws 200μA with no load and less than 3μA in shutdown.

DCM/CCM operation provides low output ripple for noise-sensitive applications. The internally set 600kHz switching frequency allows the use of small surface-mount inductors and capacitors. A 0.925V feedback reference supports low output voltages.

The HCR3233 requires a minimal number of readily available external components and is available in a small SOP-8(EP) package.

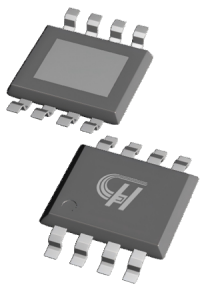

SOP-8(EP)

Figure 1. Package type of HCR3233

3A, 4V to 32V, 600kHz COT Synchronous Step-Down Converter

Pin Configuration

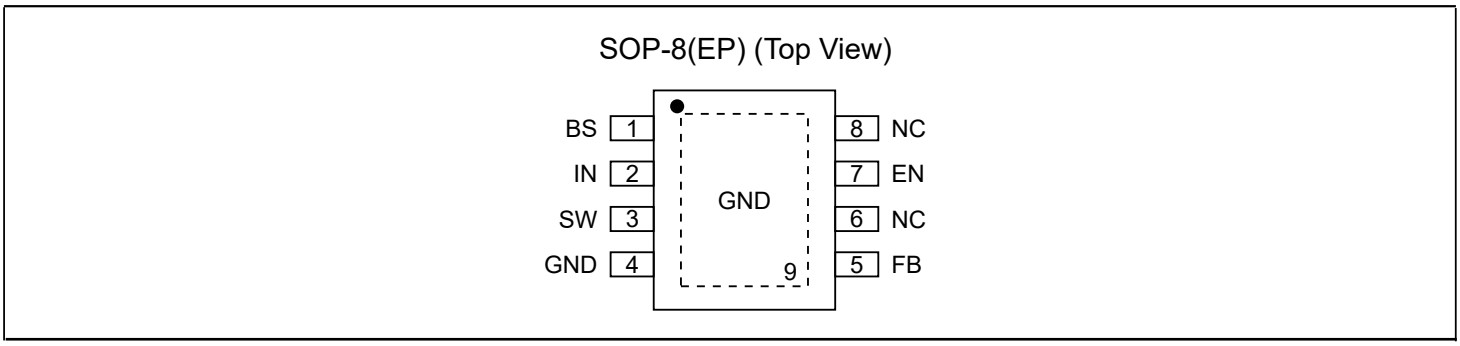

Figure 2. Pin configuration of HCR3233 (top view)

Pin Function Table

Pin Number	Pin Name	Function
1	BS	Bootstrap pin. Connect a capacitor between SW and BS to provide a floating supply for the high-side switch driver.
2	IN	Power supply input.
3	SW	Switching pin.
4, 9 (EP)	GND	Ground pin and exposed ground pad.
5	FB	Output voltage feedback input. Connect FB to the midpoint of the external resistor divider.
6	NC	Not connected.
7	EN	Enable input. Drive high to enable the IC; drive low to enter micropower shutdown.
8	NC	Not connected.

Ordering Information

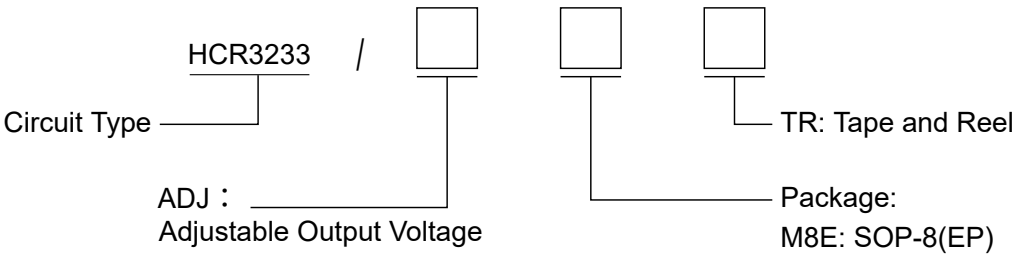

Ordering Code

Part Number	Marking ID[2]	Junction Temp. Range	Package	Quantity per Reel
HCR3233/ADJM8ETR	HCR3233XXX	−40°C to +125°C	SOP-8(EP)	4000 pcs

Note 2: HCR3233 is the device code and XXX identifies the date code. The recommended operating temperature range is −40°C to +85°C.

Absolute Maximum Ratings(1)(2)

Parameter	Min.	Max.	Unit
IN voltage	−0.3	36	V
EN voltage	−0.3	36	V
SW voltage	−0.3	36	V
BS–SW voltage	−0.3	6	V
FB voltage	−0.3	6	V
SS voltage	−0.3	6	V
Operating junction temperature, T_J	−40	125	°C
Storage temperature, T_{stg}	−65	150	°C
Lead temperature (soldering, 10 sec.)	-	260	°C

Note (1) Exceeding these ratings may damage the device.

Note (2) The device is not guaranteed to function outside of its operating conditions.

Recommended Operating Conditions(1)

Parameter	Symbol	Min.	Max.	Unit
Operating junction temperature(1)	T_J	−40	+125	°C
Operating temperature range	-	−40	+85	°C
Input voltage	V_{IN}	4	32	V
Output current	-	0	3.0	A

Note (1) All limits specified at room temperature (T_A = 25°C) unless otherwise specified. All room temperature limits are 100% production tested. All limits at temperature extremes are ensured through correlation using standard Statistical Quality Control (SQC) methods. All limits are used to calculate Average Outgoing Quality Level (AOQL).

Thermal Information(1)

Symbol	Description	SOP-8(EP)	Unit
$R_{\theta JA}$	Junction-to-ambient thermal resistance	49	°C/W
$R_{\theta JC(top)}$	Junction-to-case (top) thermal resistance	35	°C/W

ESD Ratings

Item	Description	Value	Unit
HBM	Human-body model, per ANSI/ESDA/JEDEC JS-001	±2000	V
CDM	Charged-device model, per ANSI/ESDA/JEDEC JS-002	±1000	V

Electrical Characteristics(1)

V_{IN} = 12 V, V_{OUT} = 5 V, T_A = 25°C, unless otherwise specified.

Parameter	Test Conditions	Min.	Typ.	Max.	Unit
Input voltage range	-	4	-	32	V
V_{IN} under-voltage lockout rising threshold	-	-	3.5	-	V
V_{IN} under-voltage lockout hysteresis	-	-	500	-	mV
Quiescent current (HCR3233)	V_{IN} = 12 V, no switching, V_{FB} = 1 V	-	200	-	μA
Shutdown current	V_{EN} = 0 V, V_{IN} = 12 V	-	1	-	μA
Regulated feedback voltage	T_A = 25°C	0.915	0.925	0.935	V
High-side switch on-resistance	-	-	140	-	mΩ
Low-side switch on-resistance	-	-	90	-	mΩ
High-side switch leakage current	V_{EN} = 0 V, V_{SW} = 0 V	-	-	1.0	μA
Low-side valley current limit	-	-	5	-	A
Oscillation frequency	-	-	600	-	kHz
Maximum duty cycle	-	-	100	-	%
Minimum on-time	-	-	60	-	ns
Soft start	V_{OUT} 10% to 90%	-	1.9	-	ms
Hiccup on time	-	-	3.5	-	ms
Hiccup time before restart	-	-	46.5	-	ms
EN rising threshold	-	-	1.1	-	V
EN hysteresis	-	-	0.16	-	V
Thermal shutdown threshold	-	-	160	-	°C
Thermal shutdown hysteresis	-	-	20	-	°C

Note (1) Thermal shutdown specifications are guaranteed by correlation to the design and characteristics analysis.

Functional Block Diagram

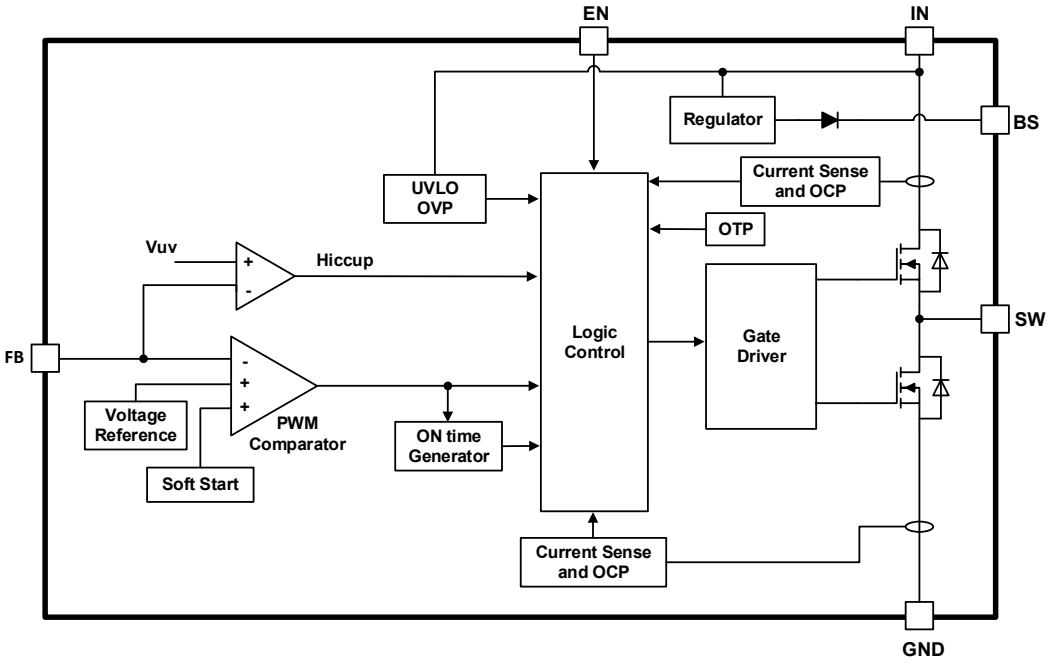

Figure 3. Functional Block Diagram

Functions

Description Overview

The HCR3233 is a COT mode step-down DC/DC converter that provides excellent transient response with no extra external compensation components. This device contains internal, low-resistance, high-voltage power MOSFETs, and operates at a frequency of 600kHz to ensure a compact, high-efficiency design with excellent performance.

Startup and Shutdown

If both VIN and EN are higher than their appropriate thresholds, the chip starts. The reference block starts first, generating a stable reference voltage and bias current, and then the internal regulator is enabled. The regulator provides a stable supply for the remaining circuitry.

Three events can shut down the chip, namely EN low, VIN low, and thermal shutdown. In the shutdown procedure, the signaling path is first blocked to avoid any fault triggering. The comp voltage and the internal supply rail are then pulled down. The floating driver is not subject to this shutdown command.

Under-Voltage Lockout (UVLO)

Under-voltage lockout (UVLO) protects the chip from operating at an insufficient supply voltage. UVLO protection monitors the internal regulator voltage. When the voltage is lower than the UVLO threshold voltage, the device is shut off. When the voltage is higher than the UVLO threshold voltage, the device is enabled again.

Internal Soft-Start

Soft-start prevents the converter output voltage from overshooting during startup. When the chip starts, the internal circuitry generates a soft-start voltage (SS) ramping up from 0V to V_{REF}. When it is lower than the internal FB reference (V_{REF}), SS overrides REF so the error amplifier uses SS as the reference. When SS is higher than V_{REF}, V_{REF} regains control. The SS time is internally fixed to 1.9ms typically.

Functions (Continued)

Thermal Shutdown

The device features auto-recovery over-temperature protection to ensure safe IC operation when the internal power MOSFET regulator power loss is high. Once the power MOSFET thermal sensor detects that the power MOSFET junction temperature exceeds 160°C, the device turns off. When the power MOSFET junction temperature cools down by approximately 20°C, the device recovers.

Over-Current and Short-Circuit Protection

The HCR3233 has cycle-by-cycle over-current limiting control (OCL). The current-limit circuit employs a valley current-sensing algorithm. The part uses the $R_{DS(ON)}$ of the LS-FET as a current-sensing element. If the magnitude of the current-sense signal is above the current-limit threshold, PWM is not allowed to initiate a new cycle, even if FB is lower than REF.

Since the comparison is made during the LS-FET on state, the OC trip level sets the valley level of the inductor current. The maximum load current at the over-current threshold (I_{OC}) can be calculated using the following equation.

$$I_{OC} = I_{limit} + \frac{\Delta I_{inductor}}{2}$$

The OCL itself limits the inductor current and does not latch off. In an over-current condition, the current to the load exceeds the current to the output capacitor, causing the output voltage to fall. Eventually, V_{FB} drops below the under-voltage protection (UVP) threshold and the HCR3233 enters hiccup protection.

Zero-Crossing Detection

The HCR3233 uses a zero-crossing (ZC) circuit to detect zero inductor current during skip-mode operation. The ZC threshold is set to a small positive value before the low-side MOSFET turns off to compensate for delay in the ZC detection circuit, entering discontinuous conduction mode (DCM) operation.

Applications Information

Setting the Output Voltage

The HCR3233 requires an input capacitor, an output capacitor, and an inductor. These components are critical to device performance. The HCR3233 is internally compensated and does not require external components to achieve stable operation. The output voltage can be programmed by a resistor divider.

$$V_{OUT} = V_{FB} \times \frac{R1 + R2}{R2}$$

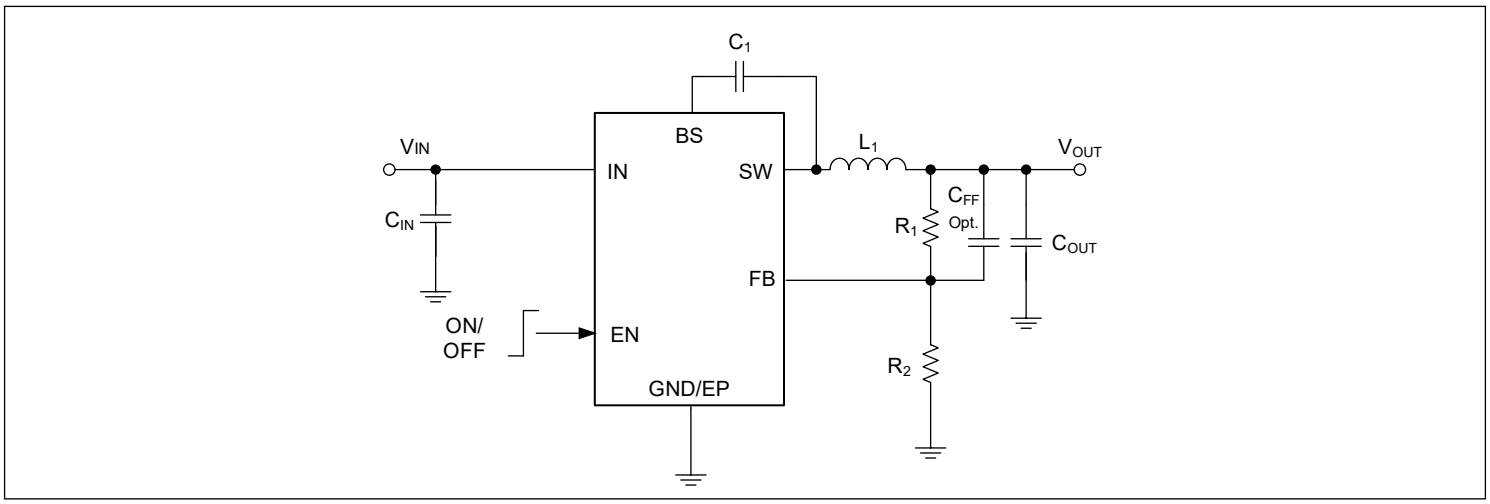

Figure 4. Typical Application Circuit

Applications Information (Continued)

Example of Component Selection

V_{OUT} (V)	R1 (kΩ)	R2 (kΩ)	L1 (μH)	C_{IN} (μF)	C_{OUT} (μF)	C_{FF} (pF) Opt.
1.0	0.82	10	1.5	Ec_100+10	22	10–100
1.5	6.2	10	2.2	Ec_100+10	22	10–100
2.5	17	10	3.3	Ec_100+10	22	10–100
3.3	25.5	10	3.3	Ec_100+10	22	10–100
5.0	44.2	10	4.7	Ec_100+10	22	10–100

Selecting the Inductor

The recommended inductor values are shown in the component selection table. It is important to guarantee that the inductor core does not saturate during any foreseeable operating situation. The inductor should be rated to handle the peak load current plus the ripple current.

Care should be taken when reviewing the different saturation current ratings specified by different manufacturers. Saturation current ratings are typically specified at 25°C, so ratings at the maximum ambient temperature of the application should be requested from the manufacturer.

$$L = \frac{V_{OUT} \times (V_{IN} - V_{OUT})}{V_{IN} \times \Delta I_L \times F_{OSC}}$$

Here ΔI_L is the inductor ripple current. Choose an inductor ripple current of approximately 30% of the maximum load current. The maximum inductor peak current is

$$I_{L(MAX)} = I_{LOAD} + \frac{\Delta I_L}{2}.$$

Under light-load conditions below 100mA, larger inductance is recommended for improved efficiency.

Selecting the Input Capacitor

The ripple current through the input capacitor C_{IN} is calculated as follows.

$$I_{CIN_RMS} = I_{OUT} \times \sqrt{D(1-D)}$$

To minimize potential noise problems, a typical X5R or better-grade ceramic capacitor should be placed as close as possible to the IN and GND pins. Care should be taken to minimize the loop area formed by C_{IN} and the IN/GND pins.

Selecting the Output Capacitor

Special attention should be paid when selecting these components. The DC bias of these capacitors can result in a capacitance value below the minimum value given in the recommended capacitor specifications table.

The output capacitor is selected to meet the output ripple noise requirements. Both steady-state ripple and transient requirements must be considered when selecting this capacitor. For the best performance, an X5R capacitor with more than 22μF capacitance is recommended.

PCB Layout Guidelines

PCB layout is very important to achieve stable operation. Duplicating the EVB layout is highly recommended for optimum performance. If a change is necessary, follow these guidelines.

1) Keep the switching-current path short and minimize the loop area formed by the input capacitor, IN pin, and GND.
2) Place bypass ceramic capacitors close to the IN pin.
3) Ensure all feedback connections are short and direct. Place the feedback resistors as close to the chip as possible.
4) Keep BS and SW away from sensitive analog areas such as FB.
5) Connect IN, SW, and especially GND to their respective large copper areas to cool the chip and improve thermal performance and long-term reliability.

Calculated Application Curves

Curves use the application equations in this datasheet and the nominal switching frequency of 600kHz. An ideal buck converter in continuous conduction is assumed, with $D = V_{OUT}/V_{IN}$ and I_{OUT} = 3A. Parasitic losses, component tolerances and switching-frequency variation are excluded.

Figures 5–7 use L = 3.3µH at V_{OUT} = 3.3V and L = 4.7µH at V_{OUT} = 5V, matching the component-selection table. Figure 8 calculates the inductance for a target ripple of 0.9A (30% of 3A).

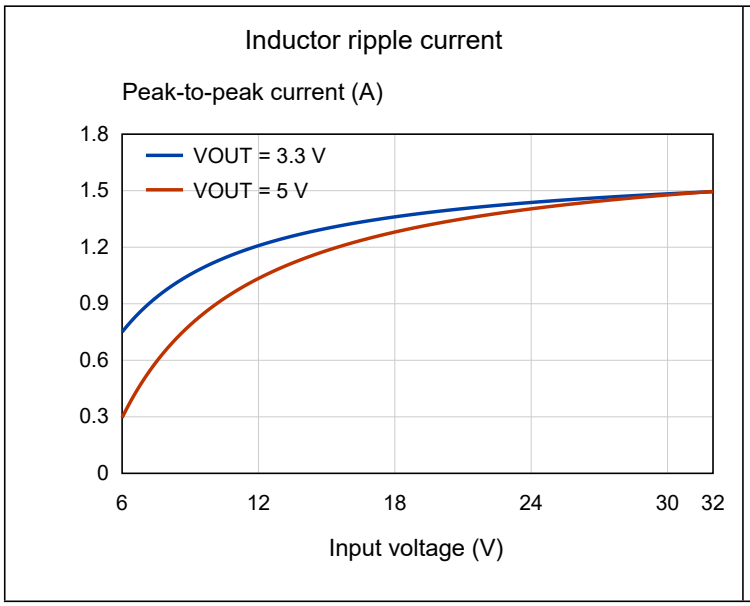

Figure 5. Calculated inductor ripple

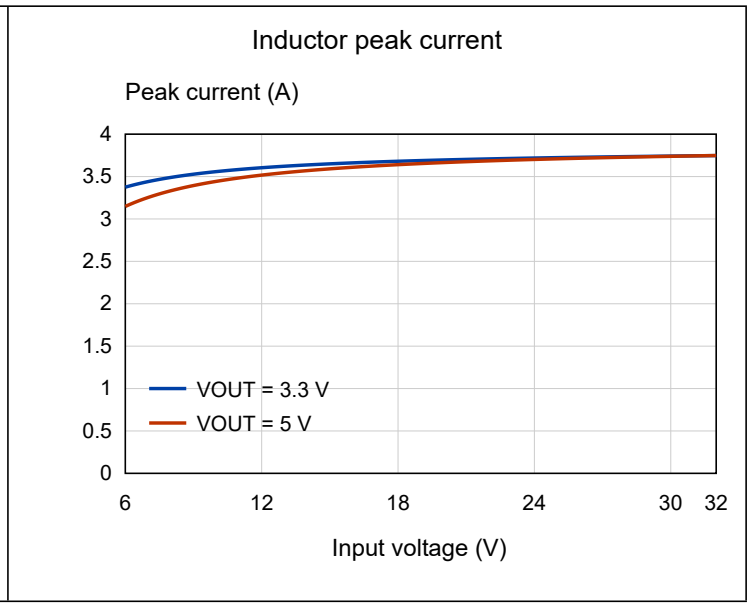

Figure 6. Calculated peak current

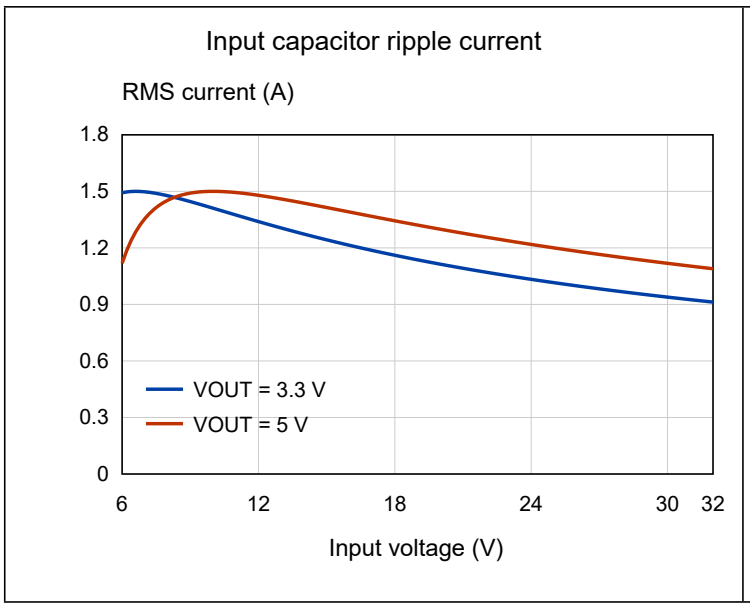

Figure 7. Calculated input capacitor RMS current

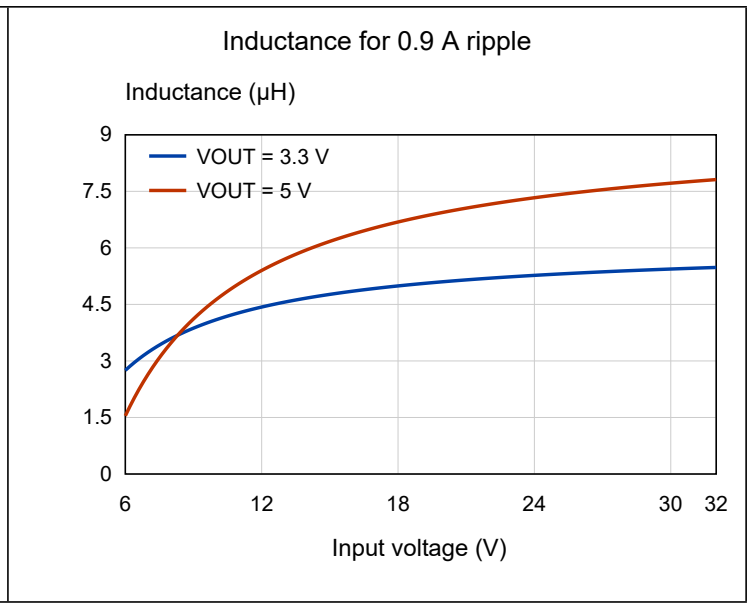

Figure 8. Calculated inductance selection

$$\Delta I_L = \frac{V_{OUT}(V_{IN} - V_{OUT})}{V_{IN} L f_{OSC}}$$

$$I_{L(PEAK)} = I_{OUT} + \frac{\Delta I_L}{2}$$

$$I_{CIN,RMS} = I_{OUT}\sqrt{D(1-D)}$$

$$L = \frac{V_{OUT}(V_{IN} - V_{OUT})}{V_{IN} \Delta I_L f_{OSC}}$$

Mechanical Dimensions

M8E PKG: SOP-8(EP)

Unit: mm

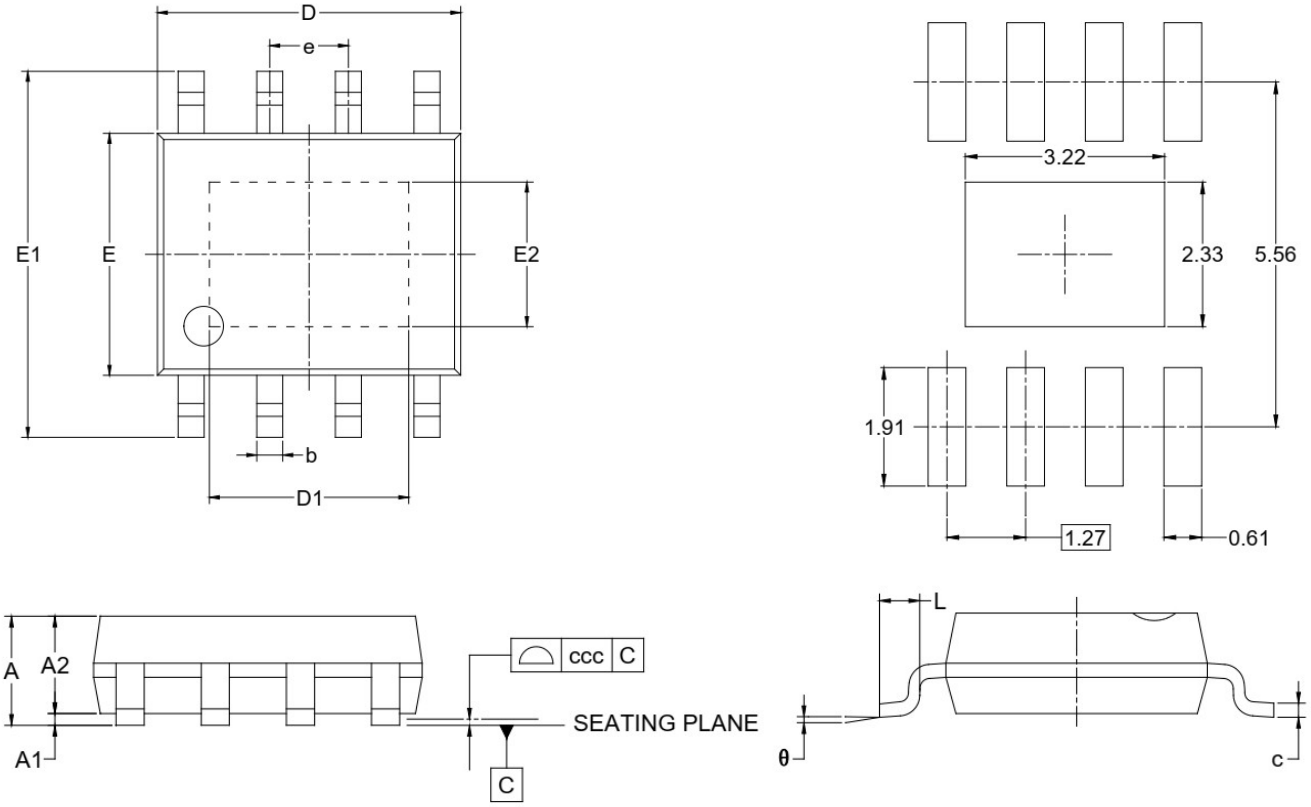

Symbol	Dimensions in Millimeters		
	MIN	MOD	MAX
A	-	-	1.700
A1	0.000	-	0.150
A2	1.250	-	1.650
b	0.330	-	0.510
c	0.170	-	0.250
D	4.700	-	5.100
D1	3.020	-	3.420
E	3.800	-	4.000
E1	5.800	-	6.200
E2	2.130	-	2.530
e	1.27 BSC		
L	0.400	-	1.270
θ	0°	-	8°
ccc	0.100		

Notes
1. This drawing is subject to change without notice.
2. The dimensions do not include mold flashes, protrusions or gate burrs.
3. Reference JEDEC MS-012.

Tape and Reel Information

Reel Dimensions

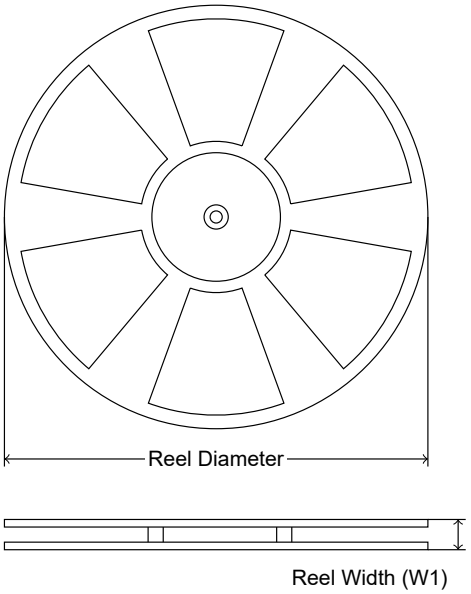

Tape Dimensions

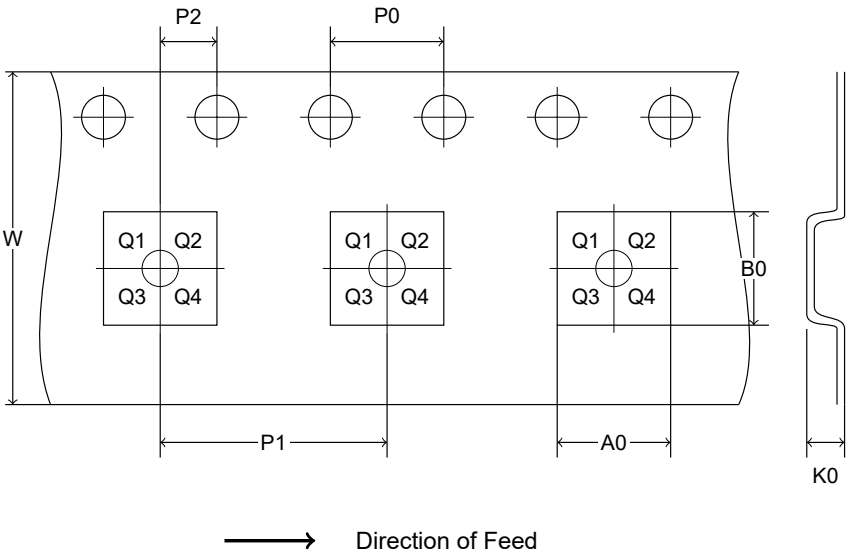

Note. The picture is for reference only. The actual product shall be the standard.

Key Parameter List of Tape and Reel

Package Type	Reel Diameter	Reel Width W1 (mm)	A0 (mm)	B0 (mm)	K0 (mm)	P0 (mm)	P1 (mm)	P2 (mm)	W (mm)	Pin1 Quadrant
SOP-8(EP)	13"	12.4	6.40	5.40	2.10	4.0	8.0	2.0	12.0	Q1

Part Number	HCR3233/ADJM8ETR
Packing Method	Tape and Reel
Quantity per Reel	4000 pcs

Conditions of Soldering and Storage

Recommended Condition of Reflow Soldering

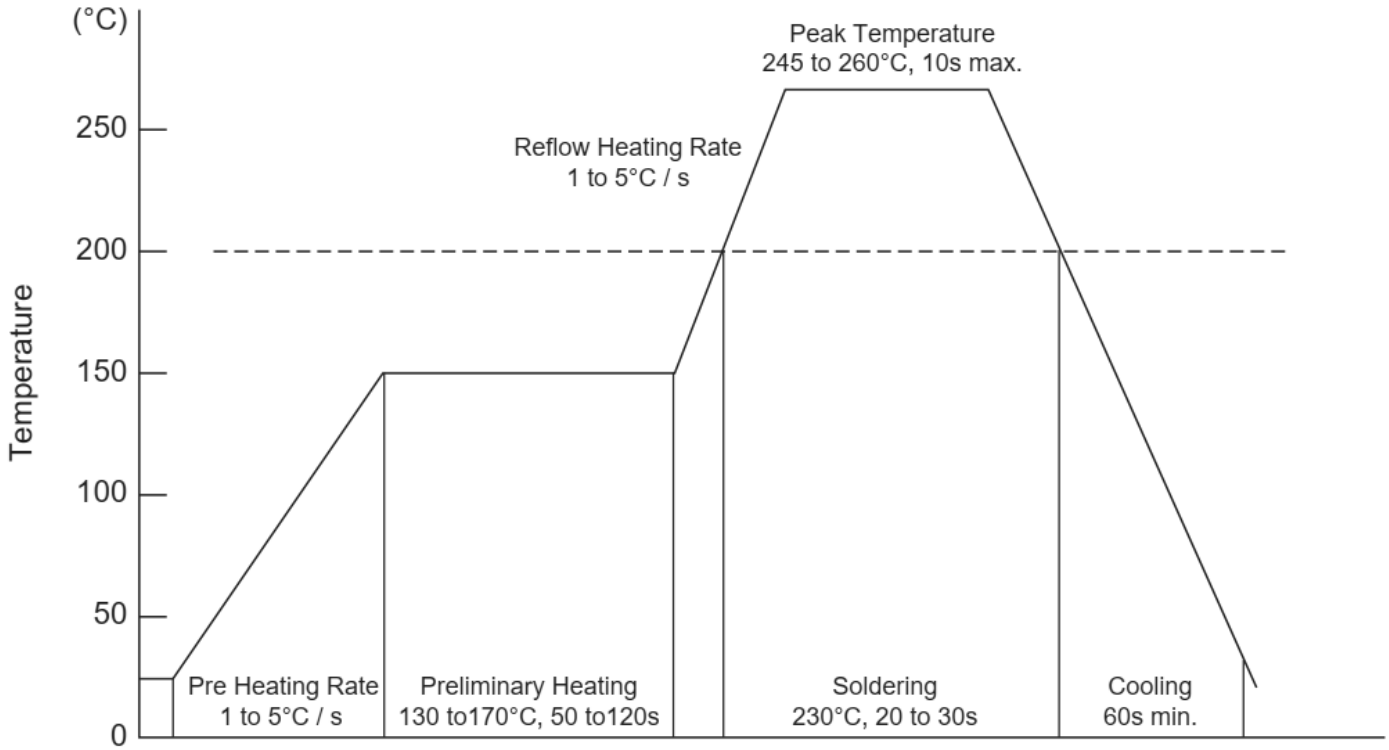

Recommended peak temperature is over 245°C. If peak temperature is below 245°C, you may adjust the following parameters.

- Time length of peak temperature (longer)
- Time length of soldering (longer)
- Thickness of solder paste (thicker)

Conditions of Hand Soldering

Temperature	300°C
Time	3s max
Times	One time

Storage Conditions

Temperature	5 to 40°C
Humidity	30 to 80% RH
Recommended period	One year after manufacturing