600KHz, 3.5A Synchronous Step-Up Boost Converter

Features

* 1.2V to 5.0V Input Voltage Range
* 2.5V to 5.5V Output Voltage Range
* 1.2V Minimum Start-up Input Voltage
* Support 5V/3.5A Output from 2.8V Input
* Up to 9A Switch Peak Current Limit
* 600kHz Pseudo-Constant Frequency Switching
* Low Quiescent Current: <27uA
* High Efficiency over Full Load Range
* True Output Disconnection from Input
* Thermal Shutdown and Output Short Circuit Protection
* Package: DFN-2x2-7

Applications

* Battery Powered Systems
* Power Banks, Juice Packs, Battery Back-Up
* Electronic Cigarettes
* Consumer Electronic Accessories
* USB Power Supplies

General Description

The HCR6605 is a synchronous high-efficiency, boost converter with true output disconnection. The device adopts constant-off-time (COT) control topology.

The device can start up from an input voltage as low as 1.2V. The input switch peak current can be up to 9A.

The typical operation frequency of the HCR6605 is 600kHz, which allows smaller inductor and capacitors to achieve a small solution size.

During light load condition, PFM is engaged to maintain the maximum efficiency.

The HCR6605 guarantees robustness with output short circuit protection and thermal shutdown.

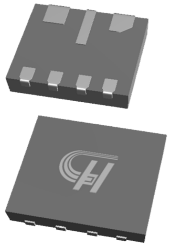

DFN-2x2-7

Figure 1. Package Type of HCR6605

Pin Configuration

DFN-2x2-7 (N27)(Top View)

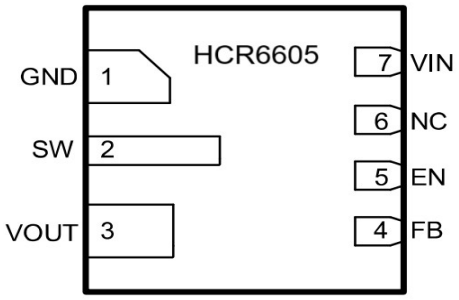

Figure 2. Pin Configuration of HCR6605(Top View)

Pin Function Table

Pin	Pin Name	Description
1	GND	Power Ground.
2	SW	Power Switch Output.
3	VOUT	Output Pin.
4	FB	Feedback Input to Error Amolifier. Connect resistor divider tap to this pin.
5	EN	Chip Enable Control Input.
6	NC	Reserved, float or connect this pin to GND.
7	VIN	Power Supply Input.

Ordering Information

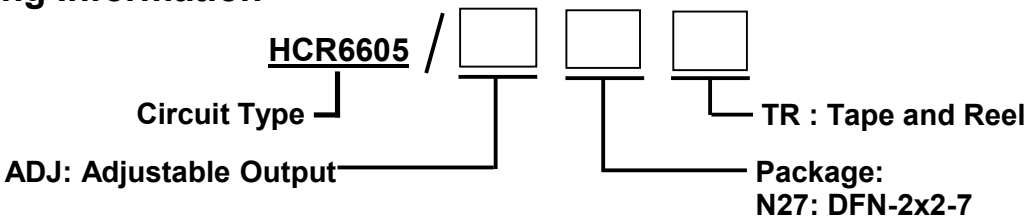

Ordering Code

Part Number	Marking ID noteA	Operating Junction Temperature Range	Package	Quantity per Reel
HCR6605/ADJN27TR	WXZYY	-40'C to +125'C	DFN-2x2-7	8000pcs/TR

note A. YY=Year code and Y=week code。

600KHz, 3.5A Synchronous Step-Up Boost Converter

Block Diagram

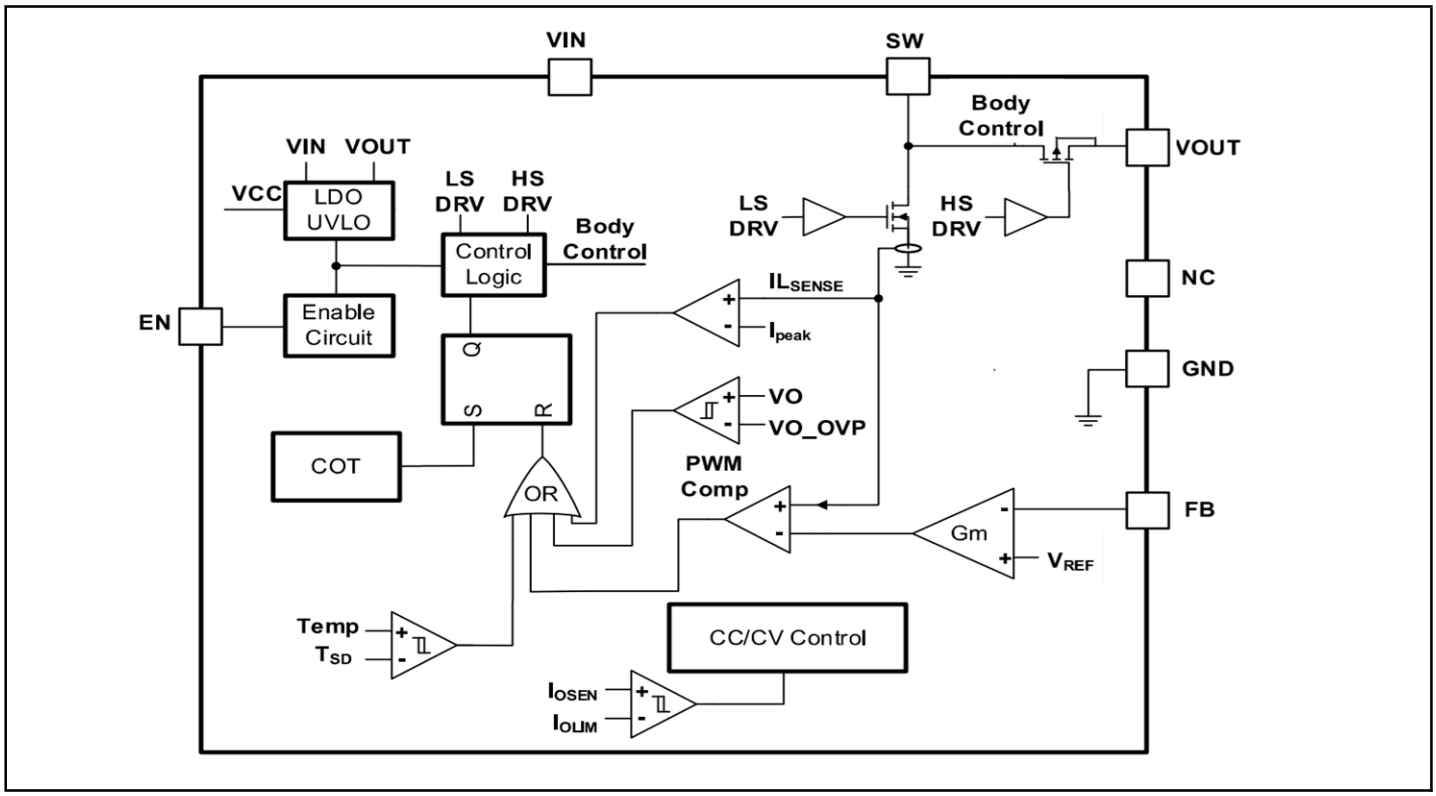

Figure 3. Block Diagram of HCR6605

Typical Application

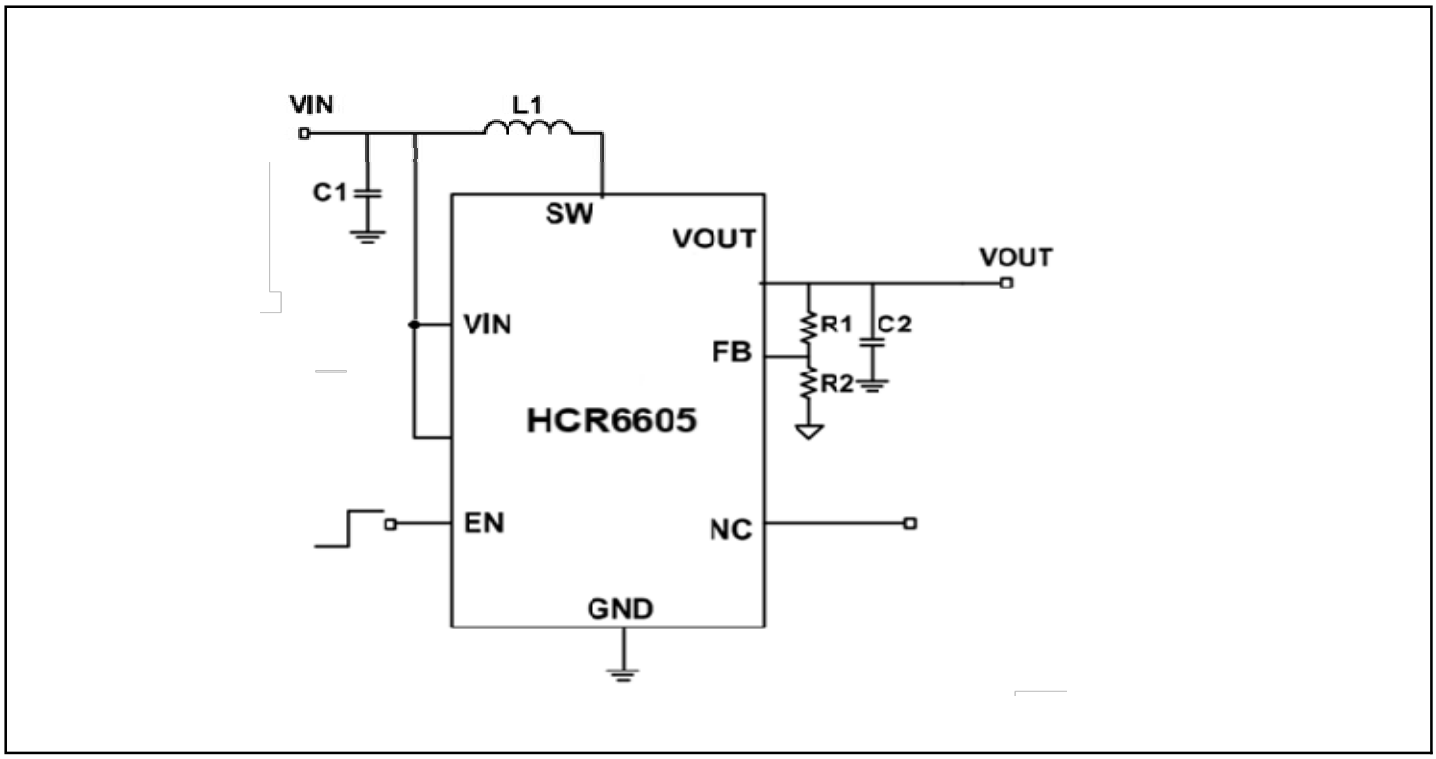

Figure 4. Typical Application of HCR6605

Absolute Maximum Ratings Note 1

Parameter	Symbol	Value	Unit
Input Voltage Voltage	V_{IN}	-0.3 to +6.5	V
SW Pin Voltage Range	V_{SW}	-0.3 to +6.5	V
EN Pin Voltage Range	V_{EN}	-0.3 to +6.5	V
FB Pin Voltage Range	V_{FB}	-0.3 to +6.5	V
Other All Pins Voltage Range	-	-0.3 to +6.5	V
Continuous Power Dissipation	P_D	550	mW
Thermal Resistance Junction to Ambient	$R_{\theta JA}$	80	'C/W
Thermal Resistance Junction to Case	$R_{\theta JC}$	16	'C/W
Junction Temperature note2	T_J	150	'C
Storage Temperature Range	TSTG	-65 to 150	'C
Lead Temperature (Soldering, 10s)	T_{LEAD}	260	'C
Human Body Model	ESD HBM	±2000	V
Machine Mode	ESD MM	±500	V

Recommend Operating Conditions note2

Operating Input Voltage Range	V_{IN}	1.2 to 5.0	V
Operting Junction Temperature Range	T_J	-40 to +125	'C
Ambient Temperature Range	T_A	-40 to +85	'C

Note 1: Absolute Maximum Ratings are those values beyond which the life of a device may be impaired.

2: TJ is calculated from the ambient temperature TA and power dissipation PD according to the following formula: TJ = TA + (PD) x (150°C/W).

600KHz, 3.5A Synchronous Step-Up Boost Converter

Electrical Characteristics note3

(V_{IN}=3.3V, Typical values are at TA=+25'C, unless otherwise noted.)

Parameter	Symbol	Test Condition	Min	Type	Max	Unit
General Parameters						
Input Voltage Range	V_{IN}	-	1.2	-	5.0	V
VIN UVLO Threshold	$V_{IN-UVLO}$	V_{IN} rising, V_O=0V	-	1.1	1.2	V
		Hysteresis, V_O=0V	-	237	-	mV
EN Logic High Threshold	V_{EN}	VEN rising, VIN=1.5V	1.1	-	-	V
		VEN rising, VIN=5V	1.3	-	-	V
		Hysteresis, VIN=1.5V	-	0.23	-	V
		Hysteresis, VIN=5V	-	0.14	-	V
EN Input Current	I_{EN}	Connect to VIN	-	50	-	nA
Quiescent Current to V_O Pin	I_Q	V_{EN}=V_{IN}=3.3V, V_O=5V, V_{FB}=1.3V, No load	-	21.7	25.7	uA
Top Switch On Resistance	R_{DSTG}	-	-	13	-	mΩ
Bottom Switch On Resistance	R_{DSBG}	-	-	10	-	mΩ
Shutdown Current	I_{SD}	V_O=V_{EN}=0V	-	1.26	-	uA
Operation Frequency	F_{SW}	-	-	640	-	KHz
Minimum ON Time	T_{ON_MIN}		-	100	-	ns
Feedback Voltage Reference	V_{FB}		1.212	1.23	1.248	V
Feedback Input Current	I_{FB}		-	-	50	nA
Switch Peak Current Limite	I_{SW_LIM}	-	7.5	9	-	A
Protection						
Output OVP Threshold	V_{O_OVP}	V_{O_OVP} rising	6	-	1	V
		Hysteresis	-	0.61	-	V
OCP Hiccup ON Time	T_{HICCUP_ON}		-	6	-	ms
OCP Hiccup OFF Time	T_{HICCUP_OFF}		-	2	-	S
Thermal Shutdown Threshold [4]	T_{SHUT}		-	150	-	'C
Thermal Recovery Threshold [4]	T_{REC}		-	130	-	'C

Note 3. 100% production test at 25°C. Specifications over the temperature range are guaranteed by design and characterization.

4. Guaranteed by design.

600KHz, 3.5A Synchronous Step-Up Boost Converter

TYPICAL PERFORMANCE CHARACTERISTICS

(VIN=1.2V~4.5V, VO=5V, L=1.5uH, CO=2x22uF+100nF, TA = +25°C, unless otherwise noted)

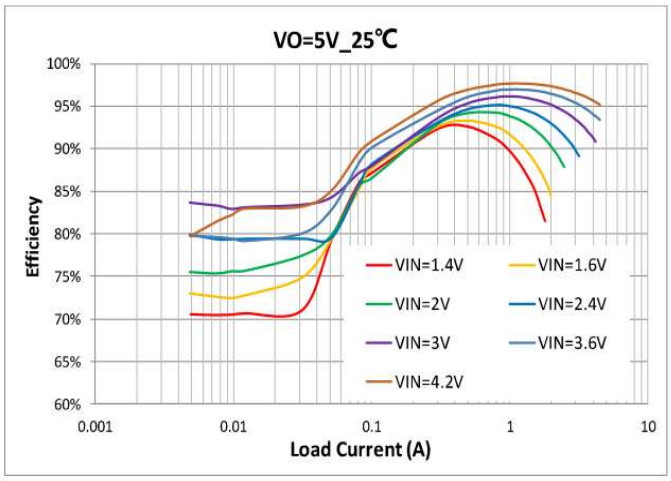

Efficiency vs. Load Current

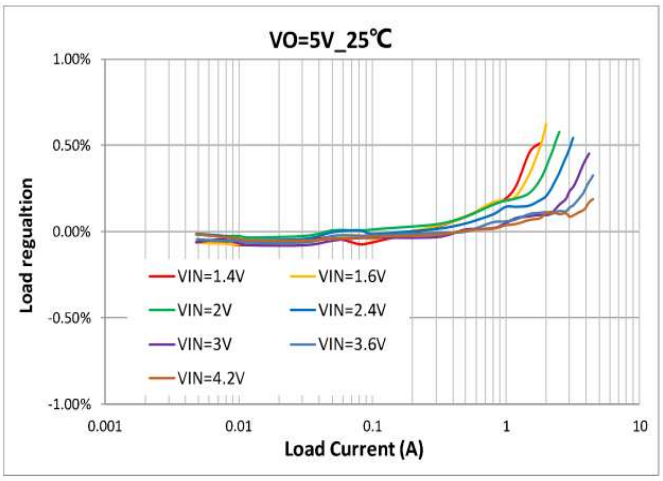

ΔVOUT vs. Load Current

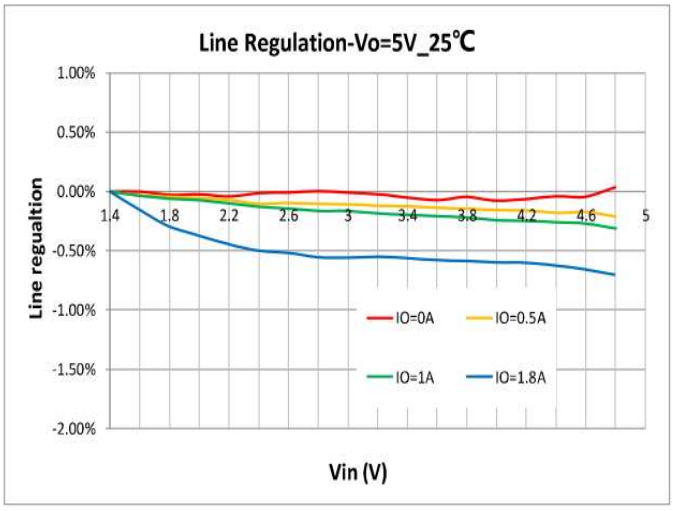

Line Regulation

V_{IN}=3.7V, V_O=5V, I_O=4A

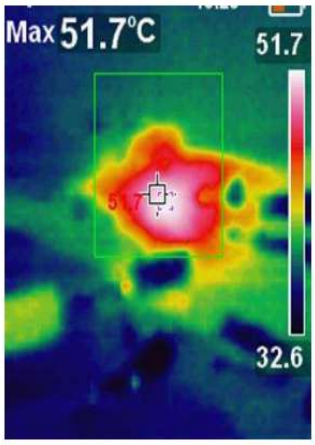

Temperature Rising

V_{IN}=3.6V, V_O=5V, I_O=1A

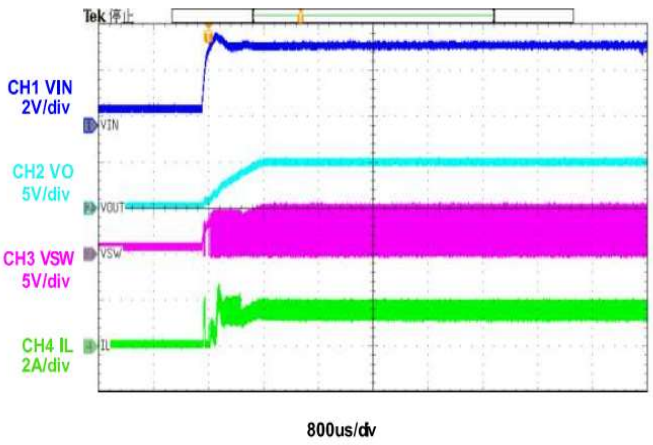

VIN Power On

V_{IN}=3.6V, V_O=5V, I_O=1A

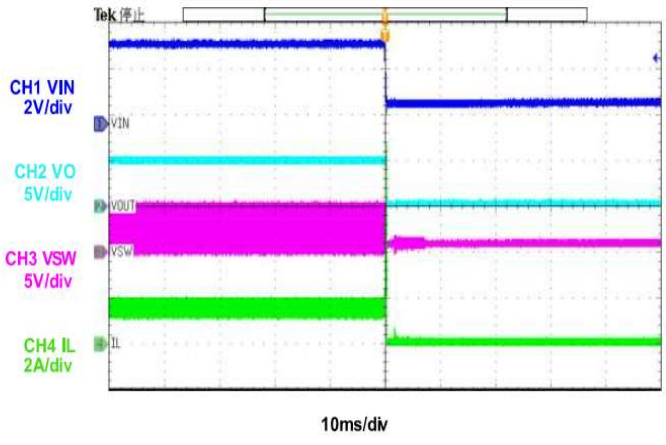

VIN Power off

600KHz, 3.5A Synchronous Step-Up Boost Converter

TYPICAL PERFORMANCE CHARACTERISTICS(con.)

(VIN=1.2V~4.5V, VO=5V, L=1.5uH, CO=2x22uF+100nF, TA = +25°C, unless otherwise noted)

V_{IN}=3.6V, V_O=5V, I_O=0.2A

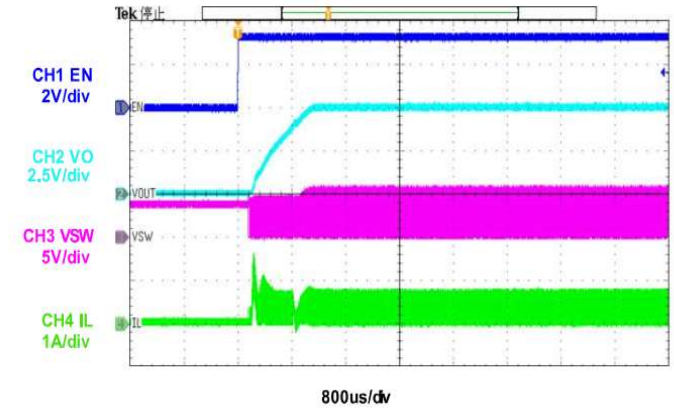

EN Power On

V_{IN}=3.6V, V_O=5V, I_O=0.2A

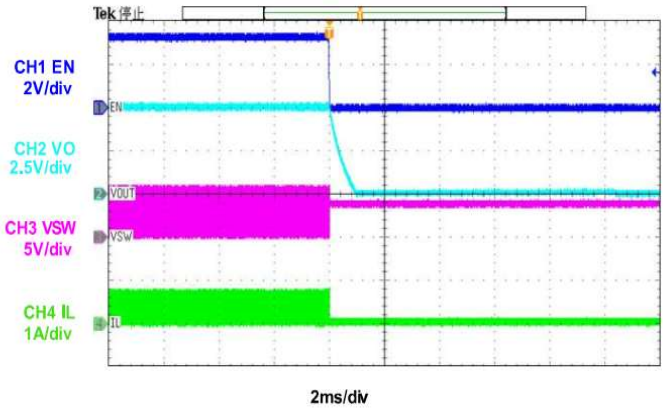

EN Power off

V_{IN}=3.6V, V_O=5V, I_O=2A

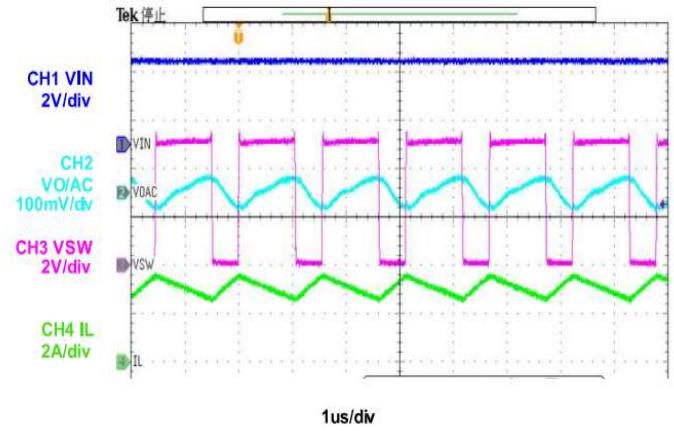

Steady State

V_{IN}=3.6V, V_O=5V, I_O=0.5A

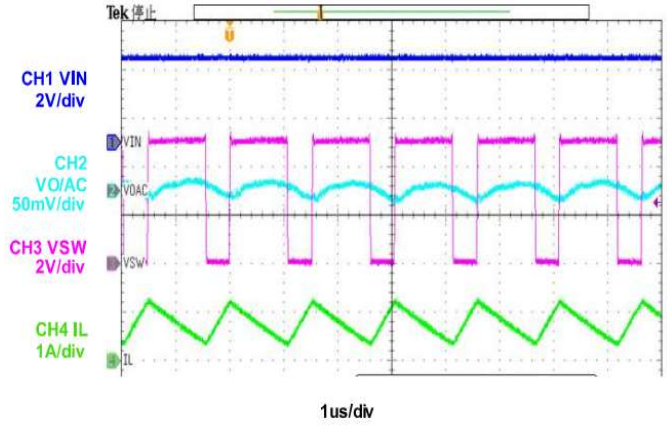

Steady State

V_{IN}=3.6V, V_O=5V, I_O=0.5A→2.5A→0.5A, I_{RAMP}=200mA/us

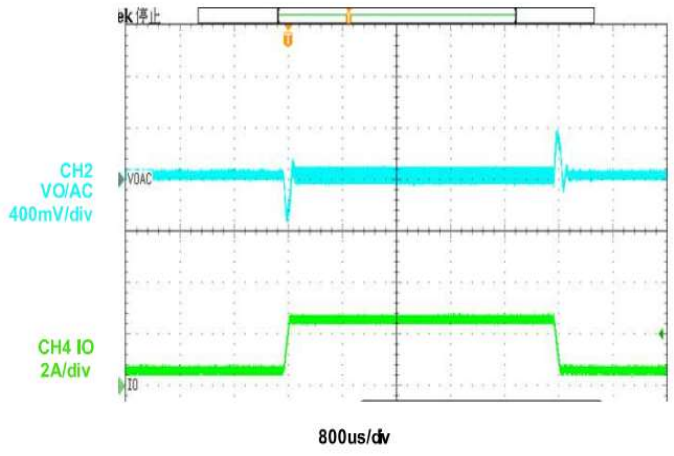

Load Transient

V_{IN}=2.5V, V_O=5V, I_O=0.2A→2A→0.2A, I_{RAMP}=200mA/us

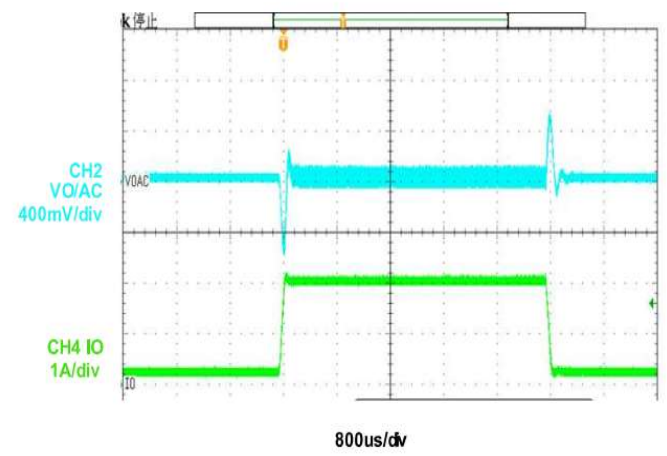

Load Transient

600KHz, 3.5A Synchronous Step-Up Boost Converter

TYPICAL PERFORMANCE CHARACTERISTICS(con.)

(VIN=1.2V~4.5V, VO=5V, L=1.5uH, CO=2x22uF+100nF, TA = +25°C, unless otherwise noted)

V_{IN}=3.6V, V_O=5V, I_O=1A → Output Short

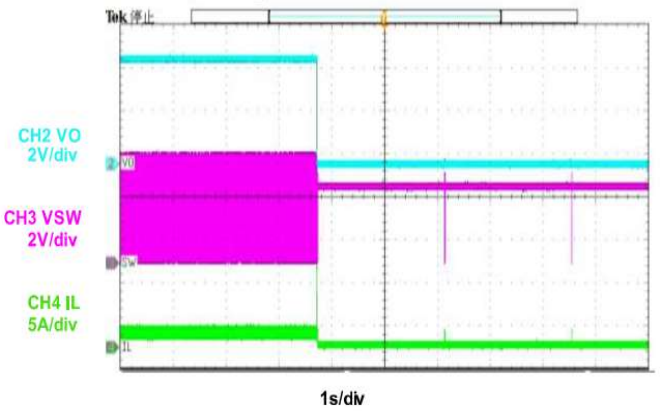

Output Short Protection(Entry)

V_{IN}=3.6V, V_O=5V, Output Short → I_O=0.5A

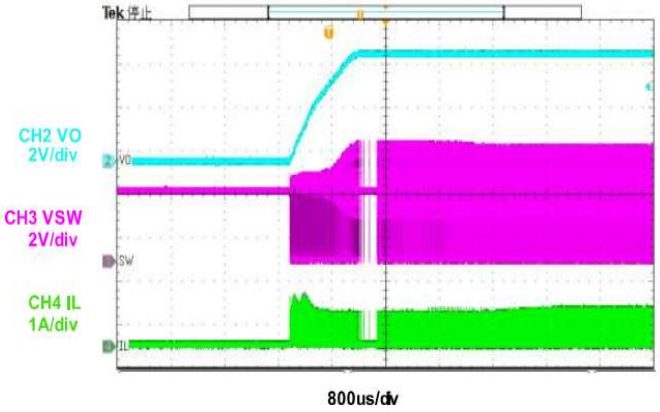

Output Short Protection(Recover)

FUNCTIONAL DESCRIPTION

The HCR6605 is a synchronous, high-efficiency, boost converter with true output disconnection. it is designed to operate from an input voltage range between 1.2V and 5.0V with up to 9A peak switch current limit。

PFM is engaged to maintain high efficiency at light load. In PFM mode, switching frequency is continuously controlled in proportion to the load current. Switch frequency decreases when load current drops to increase power efficiency at light load by reducing switching loss and minimizing the circuit power dissipation.
The HCR6605 guarantees robustness with short -circuit protection and thermal shutdown.

Start-Up

When the device is enabled, the HCR6605 can start up from a voltage as low as 1.2V.
If the input voltage is lower than 2.2V, the HCR6605 starts in pre-boost mode. During this phrase, converter switches to build up the output voltage preliminarily and the switching

Start-Up(con.)

frequency is controlled by an internal clock, which is not precise. Once the output voltage is above 2.2V, all the internal control circuit is powered up, and the converter enters normal boost mode, in which the HCR6605 steps up the voltage to the setting value by following an internal ramp up reference voltage.
If the input voltage is higher than 2.2V, the HCR6605 starts in down mode to build up the output voltage, during which the top switch body diode is reversed, and its gate is connected to VIN. Once the output voltage is higher than input voltage, the converter enters normal boost mode.

Device Enable

The HCR6605 starts operation when EN pin is pulled high and starts up with a soft-start process. Pulling EN pin low can force the device into shutdown mode with a current consumption of typically 0.1μA. In shutdown mode, the chip stops switching and all the internal control circuit is off, and the load is truly disconnected from the input.

FUNCTIONAL DESCRIPTION (con.)

Output Disconnection

A true output disconnection between input and output is implemented in the device. This feature guarantees robustness with short-circuit protection to prevent the device from being damaged by inrush current. It can also limit the output current at start-up.

Output Voltage

The output voltage is set by an external feedback resistive divider. The feedback signal is compared with internal precision 1.23V voltage reference by an error amplifier. The output voltage can be given by the equation:

$$V_O(V) = \frac{1.23V \times (R_1 + R_2)}{R_2}$$

Where R1 and R2 are defined in the typical application figure.

Switch Peak Current Limit

To prevent the device from being damaged by a large input peak current, a cycle-by-cycle current limit is adopted in the HCR6605. The low side switch is turned off immediately, as soon as the switch current touches 9A.

Down Mode

When the Vin is higher than Vo - 200mV, the device works in down mode. In this mode, the top switch body diode is reversed, and the top switch gate is connected to VIN. The top switch operates in linear mode to bleed the inductor current to avoid the inductor current run away and prevent the SW voltage overshoot. The down mode exists during startup. It is not recommended to operate the HCR6605 in down mode and the maximum value of Vin shall not exceed Vo x 0.965 - 300mV for normal work.

Thermal Regulation Control

If the junction temperature is higher than 130°C, the device begins to reduce the output voltage in order to prevent the junction temperature from rising further, when the junction temperature rises to 150°C, the device shuts down.

Protection

Over Load and Short Circuit Protection

If the output current touches output current limit, the output current loop begins to work, it decreases output voltage to limit the output power. When the output voltage is less than 0.4V, the peak current is limited to approximate 1A. For about 10ms, the device shuts down. After the delay time T_{HICCUP_OFF} (typ. 2s), the device attempts to start up again.

Short circuit protection is only valid when the input voltage is below 5.0 V. If the input voltage is higher than 5.0V, a long term short to ground event may damage the device.

Over Voltage Protection

If output voltage is higher than about 6.5V, the device stops switching. Until the output voltage drops below about 5.89V, the device resumes switching automatically.

Thermal Shutdown

When the junction temperature of the device rises above T_{SHUT}, the device is forced into shut down mode. When the temperature drops below T_{REC}, the device can be resumed with soft start.

APPLICATION INFORMATION

The HCR6605 is designed to operate from an input voltage supply range between 1.2V and 5.0V with true output disconnection. The input switch peak current can be up to 9A.

The HCR6605 operates at a quasi-constant frequency pulse-width modulation (PWM) in moderate to heavy load condition, and the switching frequency is fixed at 600kHz. In light load condition, the converter can operate in the PFM mode to achieve high efficiency over the entire load current range.

Typical Application Circuit

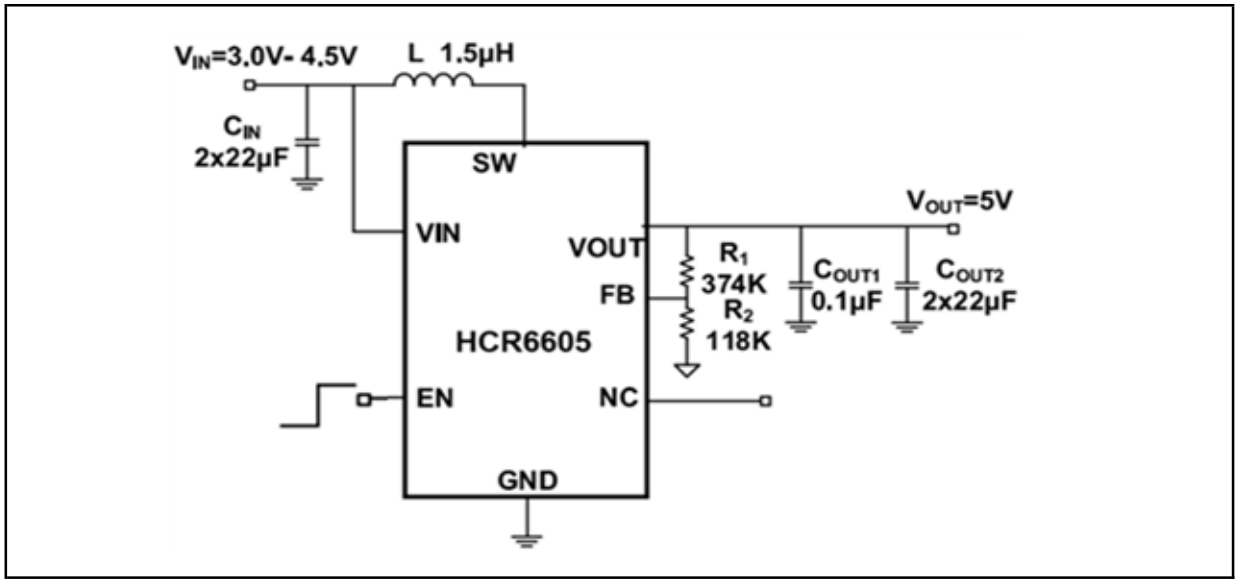

Figure 5. Typical Application Circuit of HCR6605

Design Requirements

Table 1. Design Parameters

Design Paramenters	Examples Values
Input Voltage Range	3.0V ~ 4.5V
Output Voltage	5.0V
Output Current Limit	4.5A

Setting the Output Voltage

The external resistor divider is used to set the output voltage. Typically, choose R1 to be between 300kΩ - 800kΩ. Then calculate R2 with the equation listed below:

$$R_2(k\Omega) = \frac{V_{REF}}{V_{OUT} - V_{REF}} \times R_1(k\Omega)$$

Where VREF is 1.23V, R1 is the top feedback resistor, an R2 is the bottom feedback resistor.

Selecting the Input Capacitor

The input capacitor (CIN) is used to maintain the DC input voltage. Low ESR ceramic capacitors are recommended. The input voltage ripple can be estimated with the following equation:

$$\Delta V_{IN}(V) = \frac{V_{IN}}{8 \cdot f_{SW}^2 \cdot L \cdot C_{IN}} \times (1 - \frac{V_{IN}}{V_{OUT}})$$

Where fsw is the switching frequency, and L is the inductor value.

Selecting the Output Capacitor

The output current of the boost converter is discontinuous and therefore requires an output capacitor to supply AC current to the load. For the best performance, low ESR ceramic capacitors are recommended. The output

APPLICATION INFORMATION(con.)

Selecting the Output Capacitor(con.)

voltage ripple can be estimated with the equation listed below:

$$\Delta V_{OUT}(V) = \frac{V_{OUT}}{f_S \cdot R_L \cdot C_{OUT}} \times (1 - \frac{V_{IN}}{V_{OUT}})$$

Where RL is the value of the load resistor Ceramic capacitors with X5R or X7R dielectrics are highly recommended because of their low ESR and small temperature coefficients.

Selecting the Inductor

An inductor is required to transfer the energy between the input source and the output capacitors. An inductor with a larger value results in less ripple current and a lower peak inductor current, reducing stress on the power MOSFET. However, the larger value inductor has a larger physical size, a higher series resistance, and a lower saturation current. For the smaller value inductor, larger current ripple generates higher DCR and ESR conduction losses and higher core loss. Usually, a data sheet of an inductor does not provide the ESR and core loss information. If needed, consult the inductor vendor for detailed information.

For most designs, the inductance value can be calculated with the following equation:

$$L = \frac{V_{IN}(V_{OUT} - V_{IN})}{f_S \cdot V_{OUT} \cdot \Delta I_L}$$

Where ΔI_L is the inductor ripple current. Choose the inductor ripple current to be approximately 20%~50% of the maximum inductor peak current. Ensure that the inductor does not saturate under the worst-case condition. The inductor should have a low series resistance (DCR < 10mΩ) to reduce the resistive power loss. The following table lists recommended inductors for this example application.

PCB Layout Guidelines

Efficient PCB layout is critical for high-frequency switching power supplies. A poor layout can result in reduced performance, excessive EMI resistive loss, and system instability. For best results, refer to the following figure and follow the guidelines below.

a-1. Place the output capacitor (C_{O1}, C_{O2}, C_{O3}) as close to VOUT and GND as possible, place a 0.1uF capacitor (CO) close to the IC to reduce the PCB parasitical inductance.

a-2. Keep the connection of VOUT and GND to the output capacitor short and wide with copper.

a-3. Place the FB divider R1 and R2 as close to FB as possible.

a-4. Keep the FB trace far away from noise source, such as the SW node (switching node).

a-5. Keep the input loop (CIN1, L, SW pin and GND) as small as possible.

Place enough GND vias close to the HCR6605 for good thermal dissipation.

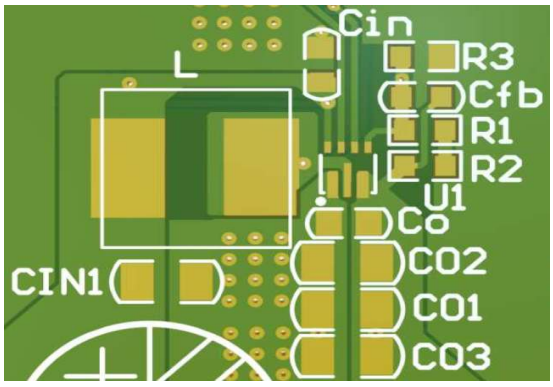

PCB Layout Recommendation

Table 2. Recommended Inductors for the example application

Part Number	L(uH)	DCR Max(mΩ)	Saturation Current(A)	Size Max (LxWxH:mm)	Vendor
74437349015	1.5	8.6	14.5	7.3x6.6x4.8	Wurth
SPM6550T-1R5M-HZ	1.5	6.49	10.3	7.1x6.5x5.0	TDK

600KHz, 3.5A Synchronous Step-Up Boost Converter

Mechanical Dimensions

PKG: DFN-2x2-7 (N27)

Unit:mm

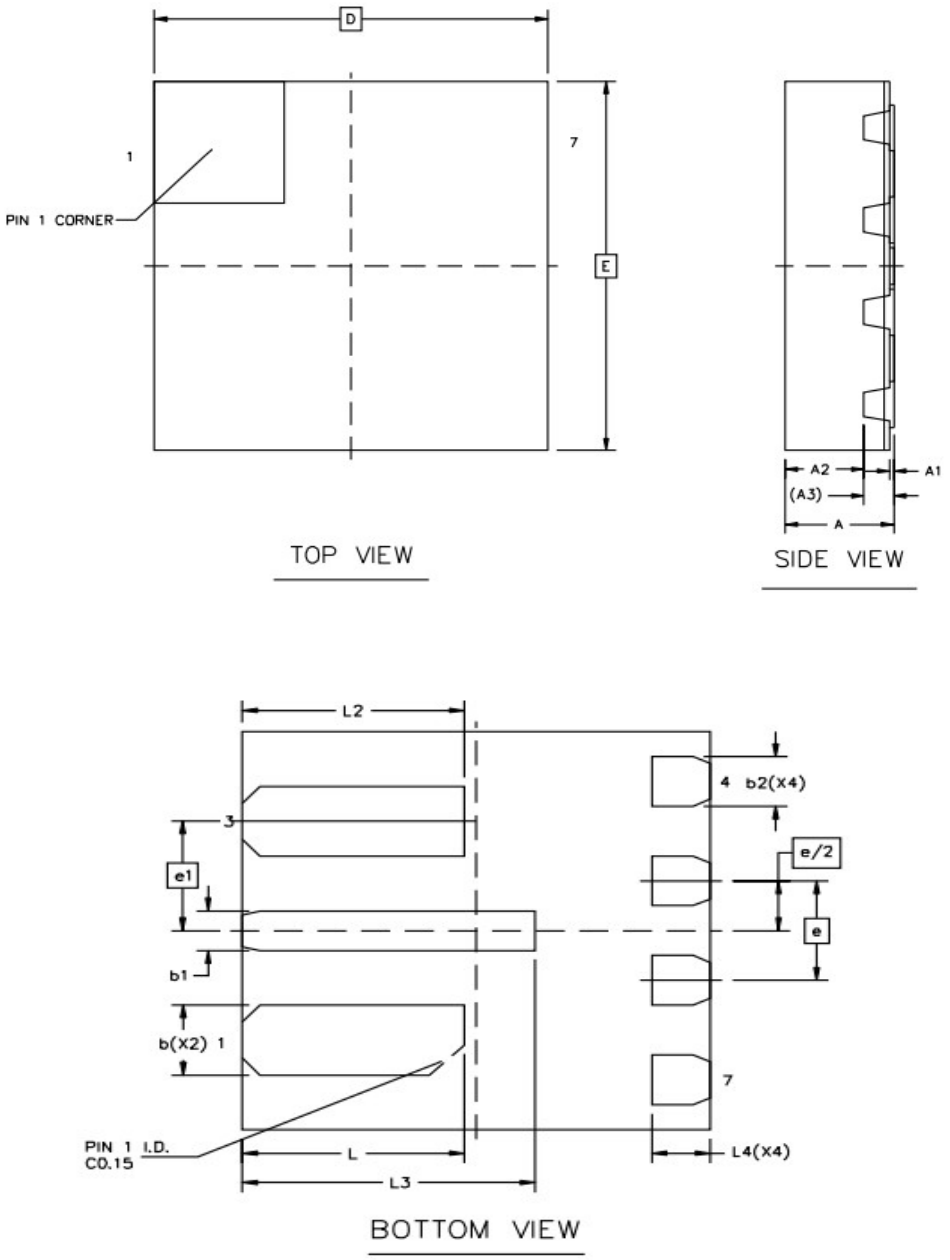

Symbol	MILLIMETER		
	MIN	NOM	MAX
A	0.5	0.55	0.6
A1	0	0.02	0.05
A2	-	0.4	-
A3	0.152 REF		
b	0.3	0.35	0.4
b1	0.15	0.2	0.25
b2	0.2	0.25	0.3
D	2 BSC		
E	2 BSC		
e	0.5 BSC		
e1	0.55 BSC		
L	0.85	0.95	1.05
L2	0.9	0.95	1.0
L3	1.2	1.25	1.3
L4	0.2	0.25	0.3

TAPE AND REEL INFORMATION

REEL DIMENSIONS

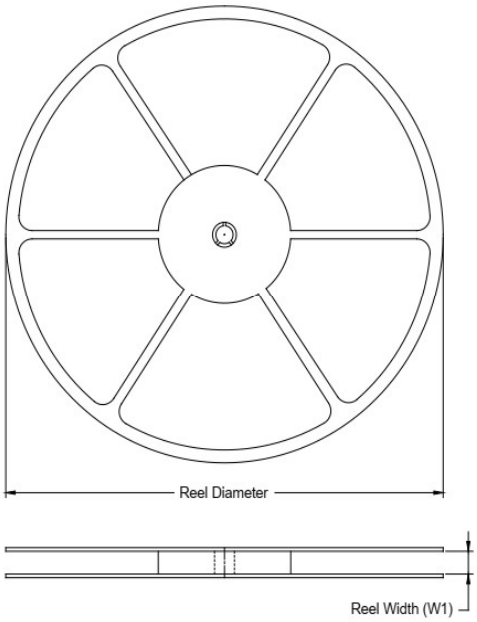

TAPE DIMENSIONS

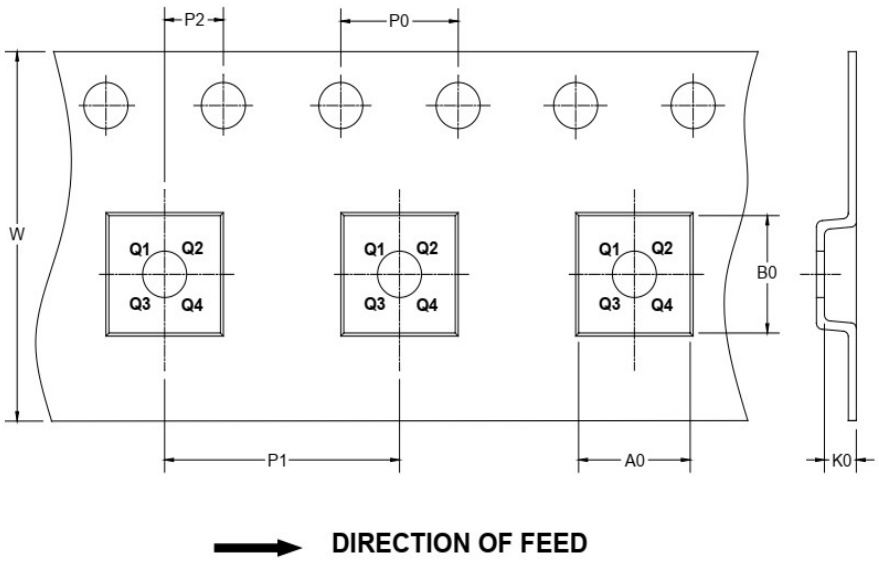

NOTE: The picture is only for reference. Please make the object as the standard.

KEY PARAMETER LIST OF TAPE AND REEL

Package Type	Reel Diameter	Reel Width W1 (mm)	A0 (mm)	B0 (mm)	K0 (mm)	P0 (mm)	P1 (mm)	P2 (mm)	W (mm)	Pin1 Quadrant
DFN-2x2-7	7"	9.5	2.30	2.30	1.00	4.0	4.0	2.0	8.0	Q1

Conditins of Soldering and Storage

* Recommended condition of reflow soldering

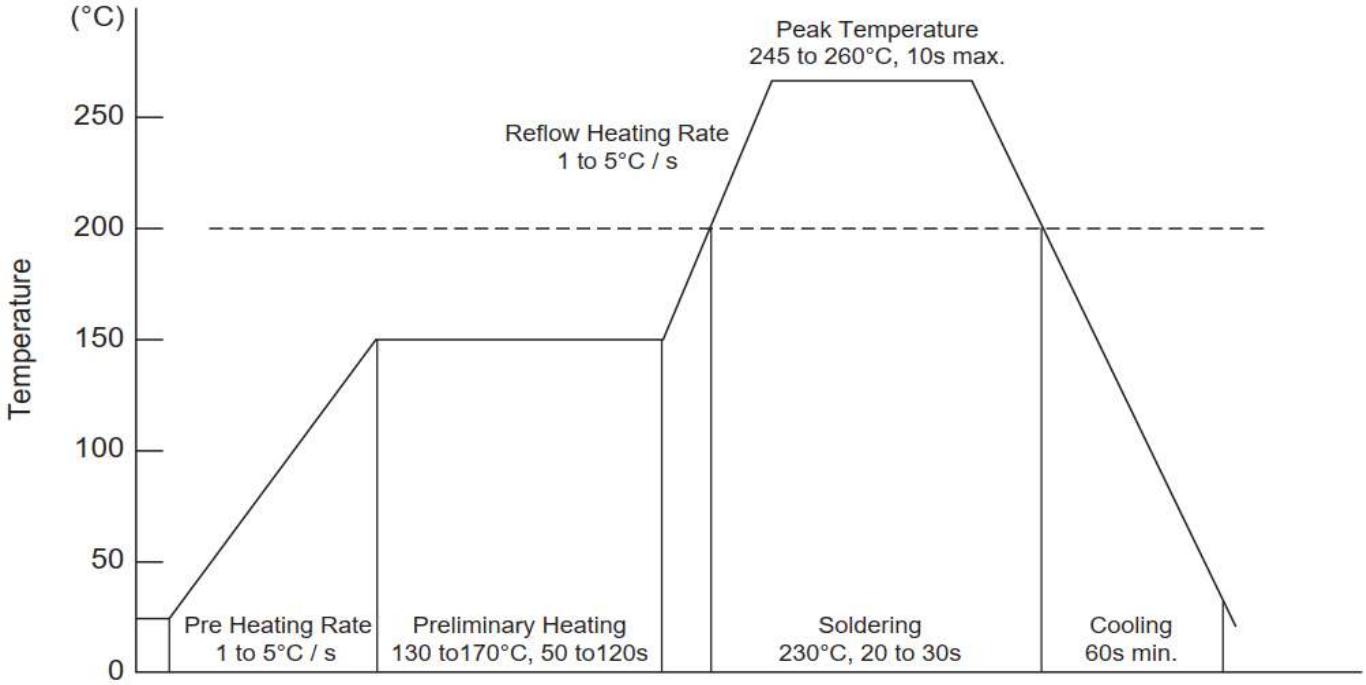

Recommended peak temperature is over 245'C, if peak temperature is below 245'C, you may adjust the following parameters:

* Time length of peak temperature (longer)
* Time length of soldering (longer)
* Thickness of solder paste (thicker)

* Conditions of hand soldering
  * Temperature : 300'C
  * Time : 3s max
  * Times : one time

* Storage conditions
  * Temperature
    5 to 40'C
  * Humidity
    30 to 80% RH
  * Recommended period
    One year after manufacturing