4A, Multi-Chemistry Battery Charger

Features

- Complete Charging Management for Single- or Multi-cell Lithium ion, LiFePO4, Lithium Titanate Batteries and Lead Acid Batteries
- Wide Input Voltage: 6.6V to 32V
- Charge Current Up to 4A
- PWM Switching Frequency: 550kHz
- 100% Duty Cycle Supports Charging at Low Voltage Drop
- Charging Current is programmed with a current sense resistor
- Constant Charging Voltage is Set by External Resistor Divider
- Automatic Conditioning of Deeply Discharged Batteries
- Automatic Recharge
- 2 Status Indications
- Soft Start
- Battery Overvoltage Protection
- Over Junction Temperature Protection
- Operating Ambient Temperature −40°C to +85°C
- Available in SSOP-10 Package
- Pb-free, RoHS-Compliant, Halogen Free

Applications

- Hand-held Equipment
- Battery-Backup Systems
- Portable Industrial and Medical Equipment
- Standalone Chargers for Multi-cell Lithium ion, LiFePO4, Lithium Titanate Batteries and Lead Acid Batteries

General Description

The HCR9766A is a PWM switch-mode battery charger controller for multi-chemistry batteries in a small package using few external components.

The HCR9766A is specially designed for charging multi-cell lithium ion, LiFePO4, Lithium Titanate batteries and Lead Acid batteries with constant current and constant voltage mode. In constant voltage mode, the regulation voltage is set by 2 external resistors at FB pin. The constant charging current is programmable with a current sense resistor.

Deeply discharged batteries are automatically trickle charged at 23% of the programmed constant charging current until the cell voltage exceeds 66.5% of constant voltage. The charge cycle is terminated once the charging current drops to 16% of full-scale current, and a new charge cycle automatically restarts if the charge current rises above 57.8% of full-scale charge current. HCR9766A will automatically enter sleep mode when input voltage is lower than battery voltage.

Other features include under voltage lockout, over junction temperature protection, battery overvoltage protection, status indications, etc.

HCR9766A is available in a space-saving SSOP-10 package.

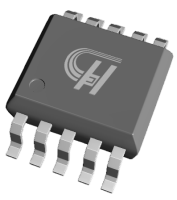

SSOP-10

Figure 1. Package Type of HCR9766A

Pin Configuration

Top View of HCR9766A

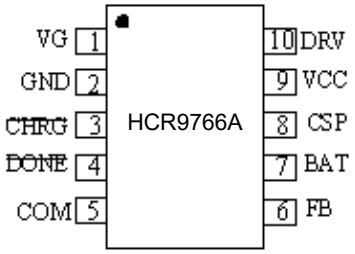

Figure 2. Pin Configuration of HCR9766A (Top View)

Pin Descriptions

Pin No.	Name	Description
1	VG	Internal Voltage Regulator. VG internally supplies power to gate driver, connect a 100nF capacitor between VG pin and V_{CC} pin.
2	GND	Ground. Negative terminal of input supply and battery.
3	$\overline{\text{CHRG}}$	Open-Drain Charge Status Output. When the battery is being charged, this pin is pulled low by an internal switch. Otherwise this pin is in high impedance state.
4	$\overline{\text{DONE}}$	Open-Drain Charge Termination Output. When the charging is terminated, this pin is pulled low by an internal switch. Otherwise this pin is in high impedance state.
5	COM	Loop Compensation Input. A 100nF capacitor from this pin to GND is needed to make sure the voltage regulation loop and current regulation loop are stable.
6	FB	Battery Voltage Feedback Input. Generally this pin is connected to the external feedback resistor divider to sense the battery voltage.
7	BAT	Negative Input for Charge Current Sensing. This pin and the CSP pin measure the voltage drop across the current sense resistor R_{CS} to provide the charging current information required for current regulation.
8	CSP	Positive Input for Charge Current Sensing. This pin and the BAT pin measure the voltage drop across the current sense resistor R_{CS} to provide the charging current information required for current regulation.
9	VCC	External DC Power Supply Input. V_{CC} is also the power supply for internal circuit. Bypass capacitors are needed between V_{CC} pin and GND.
10	DRV	Gate Drive Pin. Drive the gate of external P-channel MOSFET.

Ordering Information

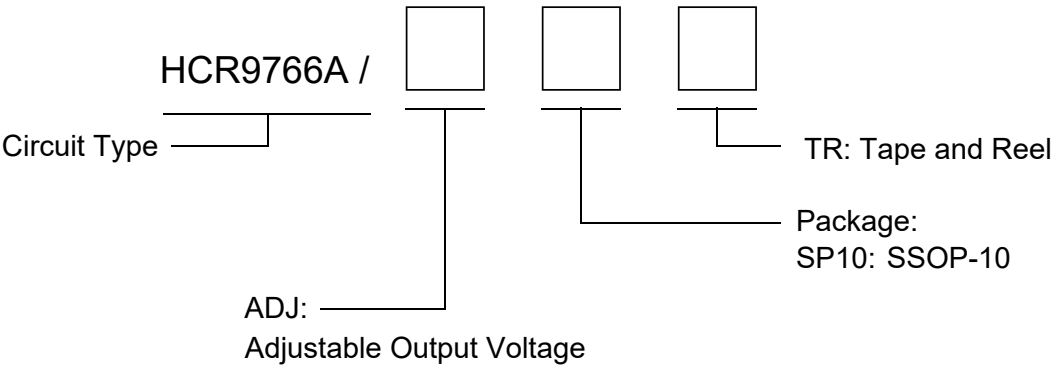

Ordering Code

Part Number	Marking ID (Note 2)	Temperature Range	Package	Quantity per Reel
HCR9766A/ADJSP10TR	HCR9766Axx	−40 to +85°C	SSOP-10	3000, Tape&Reel

Note 2: xx indicates the date code and trace code.

Typical Application Circuit

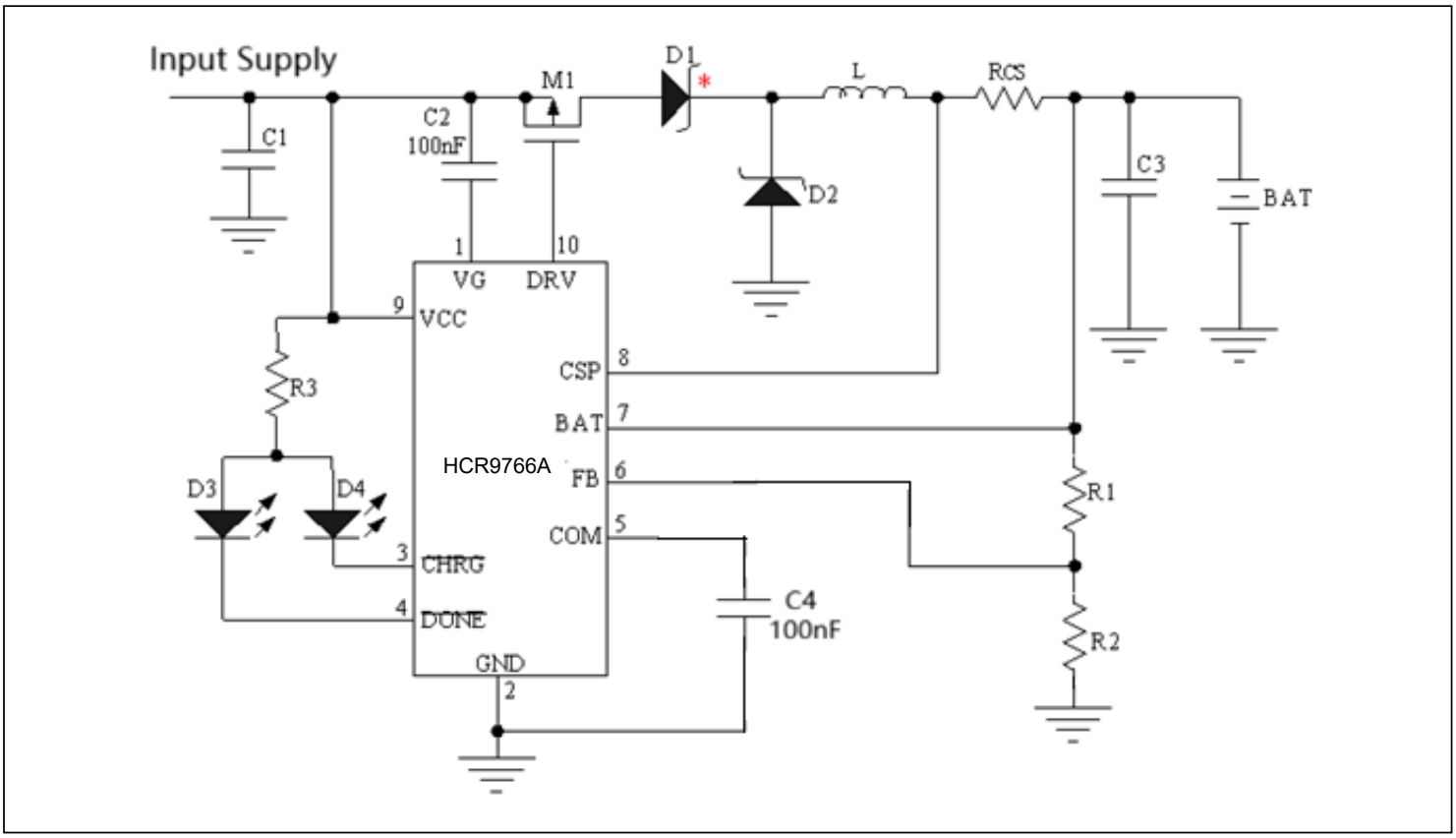

Figure 3. Typical Application Circuit

Absolute Maximum Ratings

Parameter	Min.	Max.	Unit
V_{CC} Voltage to GND	-0.3	36	V
$\overline{CHRG}$ Voltage to GND	-0.3	36	V
$\overline{DONE}$ Voltage to GND	-0.3	36	V
VG, DRV Voltage to V_{CC}	-7	V_{CC}+0.3	V
CSP, BAT Voltage to GND	-0.3	32	V
FB, COM Voltage to GND	-0.3	6.5	V
Maximum Junction Temperature	-	150	°C
Storage Temperature	-65	150	°C
Operating Ambient Temperature	-40	85	°C
Lead Temperature (Soldering, 10 seconds)	-	260	°C

Parameter	Value	Unit
Thermal Resistance (SSOP-10)	180	°C/W

Stresses beyond those listed under “Absolute Maximum Ratings” may cause permanent damage to the device. These are stress ratings only and functional operation of the device at these or any other conditions above those indicated in the operational sections of the specifications is not implied. Exposure to Absolute Maximum Rating Conditions for extended periods may affect device reliability.

Recommend Operating Conditions

Parameter	Symbol	Min.	Max.	Unit
Input Voltage Range	V_{CC}	6.6	32	V
Operating Ambient Temperature	T_A	−40	+85	°C

Electrical Characteristics

(V_{CC} = 15V, T_A = −40°C to 85°C, unless otherwise noted)

Parameter	Symbol	Test Conditions	Min.	Typ.	Max.	Unit
Input Voltage Range	V_{CC}	-	6.6	-	32	V
Under voltage Threshold	V_{UV}	-	4	5.2	6.5	V
Operating Current	I_{VCC}	No switching	410	535	660	μA
FB Pin Regulation Voltage	V_{REG}	Constant voltage mode	1.193	1.205	1.217	V
FB pin Bias Current	I_{FB}	V_{FB} = 1.2V	-	60	200	nA
Charging Current Sense	V_{CS}	$V_{BAT} > V_{PRE}$, $V_{CSP} - V_{BAT}$	72	80	88	mV
Charging Current Sense	V_{CS}	$V_{BAT} < V_{PRE}$, $V_{CSP} - V_{BAT}$	10	19	28	mV
Current into BAT Pin	I_{BAT1}	Termination, V_{BAT} = 12V	-	-	2	μA
Current into BAT Pin	I_{BAT2}	Sleep mode, V_{BAT} = 12V	2.2	3.6	5	μA
Precharge Threshold	V_{PRE}	FB pin, V_{FB} rises	64	66.5	69	$\%V_{REG}$
Precharge Threshold Hysteresis	H_{PRE}	FB pin, V_{FB} falls	-	2.5	-	$\%V_{REG}$
Charge Termination Threshold	I_{term}	Charge current decreases	10.5	16	21.5	$\%I_{CC}$
Recharge Threshold	V_{RE}	Charge Current Rises	50	57.8	66	$\%I_{CC}$
Overvoltage Trip Level	V_{ov}	FB Pin, V_{FB} rises	1.036	1.066	1.1	V_{REG}
Overvoltage Clear Level	V_{clr}	FB pin, V_{FB} falls	1.0	1.025	1.05	V_{REG}

Electrical Characteristics (Continued)

(V_{CC} = 15V, T_A = −40°C to 85°C, unless otherwise noted)

Parameter	Symbol	Test Conditions	Min.	Typ.	Max.	Unit
$\overline{CHRG}$ Pin						
$\overline{CHRG}$ Pin Sink Current	I_{CHRG}	V_{CHRG} = 1V, charge mode	7	12	18	mA
$\overline{CHRG}$ Leakage Current	I_{LK1}	V_{CHRG} = 25V, termination mode	-	-	1	μA
$\overline{DONE}$ Pin						
$\overline{DONE}$ Sink Current	I_{DONE}	V_{DONE} = 1V, termination mode	7	12	18	mA
$\overline{DONE}$ Leakage Current	I_{LK2}	V_{DONE} = 25V, charge mode	-	-	1	μA
Oscillator						
Switching Frequency	f_{osc}	-	430	550	670	kHz
Maximum Duty Cycle	D_{max}	-		100		%
Sleep Mode						
Sleep Mode Threshold (measure V_{CC} - V_{BAT})	V_{SLP}	V_{CC} falling, V_{BAT} = 12V	0.0	0.05	0.1	V
Sleep mode Release Threshold (measure V_{CC} - V_{BAT})	V_{SLPR}	V_{CC} rising, V_{BAT} = 12V	0.2	0.32	0.46	V
DRV Pin						
V_{DRV} High (V_{CC} - V_{DRV})	V_H	I_{DRV} = -10mA	-	60	-	mV
V_{DRV} Low (V_{CC} - V_{DRV})	V_L	I_{DRV} = 0mA	-	6.3	-	V
Rise Time	t_r	C_{load} = 2nF, 10% to 90%	30	40	65	ns
Fall Time	t_f	C_{load} = 2nF, 90% to 10%	30	40	65	ns

Note: V_{REG} is the regulation voltage at FB pin in constant voltage mode.

I_{CC} is the charge current in constant current mode.

Detailed Description

The HCR9766A is a constant current, constant voltage battery charger controller that adopts PWM step-down (buck) switching architecture. The HCR9766A can be used to charge single- or multi-cell Lithium ion battery, LiFePO4, Lithium Titanate batteries and Lead Acid batteries. The charge current is set by an external sense resistor (R_{CS}) across the CSP and BAT pins. The final battery regulation voltage in constant voltage mode can be set by 2 feedback resistors at FB pin.

A charge cycle begins when the voltage at the V_{CC} pin rises above under voltage threshold and is greater than the battery voltage by V_{SLPR}. At the beginning of the charge cycle, if the battery voltage is less than 66.5% of regulation voltage (V_{REG}), the charger goes into trickle charge mode. The trickle charge current is internally set to 23% (Typical) of the full-scale current. When the battery voltage exceeds 66.5% of regulation voltage, the charger goes into the full-scale constant current charge mode. In constant current mode, the charge current is set by the external sense resistor R_{CS} and an internal 80mV reference, the charge current equals 80mV/R_{CS}.

When the battery voltage approaches the regulation voltage, the charger goes into constant voltage mode, and the charge current will start to decrease. When the charge current drops to 16% of the full-scale current, the charge cycle is terminated, an internal comparator turns off the internal pull-down N-channel MOSFET at the $\overline{CHRG}$ pin, another internal pull-down N-channel MOSFET at the $\overline{DONE}$ pin is turned on to indicate the termination status.

To restart the charge cycle, just remove and reapply the input voltage. Also, a new charge cycle will begin if the charge current rises above the recharge threshold of 57.8% of the full-scale charge current.

When the input voltage is not present, the charger automatically goes into sleep mode, all the internal circuits are shut down.

An overvoltage comparator guards against voltage transient overshoots (>6.6% of regulation voltage). In this case, the external P-channel MOSFET is turned off until the overvoltage condition is cleared. This feature is useful for battery load dump or sudden removal of battery.

The charging profile is shown in Figure 4.

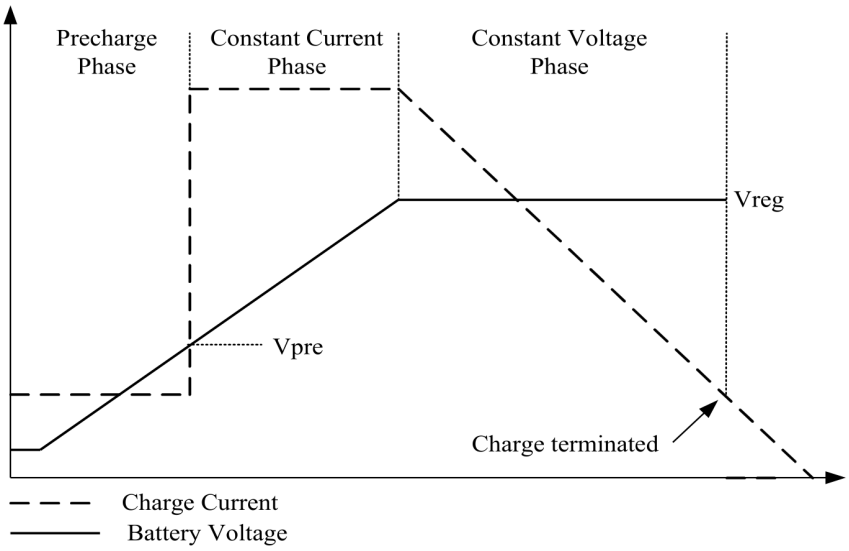

Figure 4. The Charging Profile

Application Information

Under voltage Detection

An under-voltage detection circuit monitors the input voltage and keeps the charger off if V_{CC} falls below 6.5V (Maximum).

Trickle Charge Mode

At the beginning of a charge cycle, if the voltage at FB pin is below 66.5% of FB pin regulation voltage, the charger goes into trickle charge mode with the charge current reduced to 23% of the full-scale current.

Charge Current Setting

The full-scale charge current, namely the charge current in constant current mode, is decided by the following formula:

$$I_{CH} = \frac{80mV}{R_{CS}}$$

Where:

I_{CH} is the full-scale charge current.

R_{CS} is the current sense resistor between the CSP pin and BAT pin.

Set the Regulation Voltage

As shown in Figure 3, battery voltage is fed back to FB pin via the resistor divider composed of R_1 and R_2. HCR9766A decides the charging status based on FB voltage. When FB voltage approaches 1.205V, the charger goes into constant voltage mode. In constant voltage mode, the charge current decreases gradually, and the battery voltage remains unchanged.

In light of FB pin bias current, the voltage across battery terminals is decided by the following equation:

$$V_{BAT} = V_{FB}\left(1 + \frac{R_1}{R_2}\right) + I_B R_1$$

The regulation voltage in constant voltage mode is determined by the following equation:

$$V_{REG} = 1.205\left(1 + \frac{R_1}{R_2}\right) + I_B R_1$$

Where, I_B is FB pin bias current, which is 60nA typical.

From the above equation, we can see that an error is introduced due to the existence of bias current I_B, the error is $I_B \times R_1$. If R_1 = 500kΩ, then the error is about 30mV. So the error should be taken into account while designing the resistor divider.

The maximum regulation voltage that can be set is 30V.

Application Information (Continued)

Charge Termination

In constant voltage mode, the charge current decreases gradually. When the charge current decreases to 16% of the full-scale current, the charging is terminated. In charge termination mode, $\overline{DONE}$ pin outputs low to indicate the charge termination mode, and HCR9766A will continue to charge the battery in constant voltage mode to ensure that the battery is fully charged.

Automatic Recharge

After the charge cycle is completed and both the battery and the input power supply (wall adapter) are still present, a new charge cycle will begin if the charge current rises above 57.8% of the full-scale charge current due to self-discharge or external loading.

Status Indication

The HCR9766A has 2 open-drain status outputs: $\overline{CHRG}$ and $\overline{DONE}$. $\overline{CHRG}$ pin is pulled low when the charger is in charging status, otherwise $\overline{CHRG}$ becomes high impedance. $\overline{DONE}$ pin is pulled low if the charger is in charge termination status, otherwise $\overline{DONE}$ becomes high impedance.

The open-drain status output that is not used should be tied to ground.

Table 1 lists the two indicators' status and its corresponding charging status. It is supposed that the red LED is connected to $\overline{CHRG}$ pin and the green LED is connected to $\overline{DONE}$ pin.

Gate Drive

The HCR9766A gate driver can provide high transient currents to drive the external pass transistor. The rise and fall times are typically 40ns when driving a 2000pF load, which is typical for a P-channel MOSFET with $R_{ds(on)}$ in the range of 30mΩ.

A voltage clamp is added to limit the gate drive to 7.5V max. below V_{CC}. For example, if V_{CC} is 20V, then the DRV pin output will be pulled down to 12.5V min. This allows low-voltage P-channel MOSFETs with superior $R_{ds(on)}$ to be used as the pass transistor, thus increasing efficiency.

$\overline{CHRG}$ Pin	$\overline{DONE}$ Pin	State Description
Low (red LED on)	High Impedance (green LED off)	Charging
High Impedance (red LED off)	Low (green LED on)	Charge termination
High Impedance (red LED off)	High Impedance (green LED off)	There are 2 possible reasons: • The voltage at V_{CC} pin is below V_{UV}. • The voltage at V_{CC} pin is below V_{BAT}.

Table 1. Indication Status

Application Information (Continued)

Loop Compensation

In order to make sure that the current regulation loop and the voltage regulation loop are stable, a 100nF ceramic capacitor from the COM pin to GND is necessary.

Input Capacitors

Since the input capacitor (C_1 in Figure 3) is assumed to absorb all input switching ripple current in the converter, it must have an adequate ripple current rating. Worst-case RMS ripple current is approximately one-half of output charge current.

In order to depress the high-frequency oscillation during P-channel MOSFET turning on and off, it is best that the input capacitor consists of the following 3 capacitors in parallel:

• Electrolytic capacitor for low-frequency filtering

• A ceramic capacitor from 1μF to 10μF

• A high-frequency capacitor from 47nF to 1μF

Output Capacitors

The selection of output capacitor (C_3 in Figure 3) is primarily determined by the ESR required to minimize ripple voltage and load step transients. It is best that the output capacitor consists of the following 2 capacitors in parallel:

• A 10μF electrolytic capacitor for low-frequency filtering

• A ceramic capacitor from 1μF to 10μF

If only ceramic capacitors can be used, care must be taken that some ceramic capacitors exhibit a large voltage coefficient, which may lead to high voltage at BAT pin when the battery is not present. In this case, the capacitor value should be increased properly so that no damage will be done.

Inductor Selection

During P-channel MOSFET on time, the inductor current increases, and decreases during P-channel MOSFET off time. The inductor ripple current increases with lower inductance and higher input voltage. Higher inductor ripple current results in higher charge current ripple and greater core losses. So the inductor ripple current should be limited within a reasonable range.

The inductor ripple current is given by the following formula:

$$\Delta I_{\mathrm{L}} = \frac{V_{\mathrm{BAT}}}{fL}\left(1 - \frac{V_{\mathrm{BAT}}}{V_{\mathrm{CC}}}\right)$$

Where:

f is the switching frequency 550kHz.

L is the inductor value.

V_{BAT} is the battery voltage.

V_{CC} is the input voltage.

A reasonable starting point for setting inductor ripple current is to assume that $\Delta I_L = 0.3 \times I_{CH}$, where I_{CH} is the full-scale charge current.

Remember that the maximum ΔI_L occurs at the maximum input voltage and the lowest inductor value. So lower charge current generally calls for a larger inductor value.

Application Information (Continued)

MOSFET Selection

The HCR9766A uses a P-channel power MOSFET switch. The MOSFET must be selected to meet the efficiency or power dissipation requirements of the charging circuit as well as the maximum temperature of the MOSFET. The peak-to-peak gate drive voltage is set internally; this voltage is typically 5.3V. Consequently, logic-level threshold MOSFETs must be used. Pay close attention to the BV_{DSS} specification for the MOSFET as well; many of the logic-level MOSFETs are limited to 30V or less.

Selection criteria for the power MOSFET include the "on" resistance $R_{ds(on)}$, total gate charge Q_g, reverse transfer capacitance C_{RSS}, input voltage and maximum current.

The MOSFET power dissipation at maximum output current is approximated by the equation:

$$P_d = \frac{V_{BAT}}{V_{CC}} R_{ds(on)} I_{CH}^2 (1 + 0.005dT)$$

Where:

P_d is the power dissipation of the power MOSFET.

V_{BAT} is the maximum battery voltage.

V_{CC} is the minimum input voltage.

$R_{ds(on)}$ is the power MOSFET on resistance at room temperature.

I_{CH} is the charge current.

dT is the temperature difference between actual ambient temperature and room temperature (25°C).

In addition to the $I^2R_{ds(on)}$ loss, the power MOSFET still has transition loss, which is highest at the highest input voltage. Generally speaking, for V_{IN} < 20V, the $I^2R_{ds(on)}$ loss may be dominant, so the MOSFET with lower $R_{ds(on)}$ should be selected for better efficiency; for V_{IN} > 20V, the transition loss may be dominant, so the MOSFET with lower C_{RSS} can provide better efficiency. C_{RSS} is usually specified in the MOSFET characteristics; if not, then C_{RSS} can be calculated using $C_{RSS} = Q_{GD}/\Delta V_{DS}$.

The MOSFETs such as CN2305, 4459, 4435, 9435, 3407A can be used. The part numbers listed above are for reference only; users can select the right MOSFET based on their requirements.

Diode Selection

The diodes D1 and D2 in Figure 3 are Schottky diodes. The current rating of the diodes should be at least the charge current limit; the voltage rating of the diode should exceed the maximum expected input voltage.

A diode that is much larger than sufficient can result in larger transition losses due to its larger junction capacitance.

Diode D1 in Figure 3 is used as a blocking diode to prevent battery current from flowing back to V_{CC} when input supply is absent. Without D1, HCR9766A consumes about 26μA current from the battery (V_{BAT} = 12V), so diode D1 can be removed if the 26μA battery current is not a concern.

Application Information (Continued)

Battery Current in Sleep Mode

In the typical application circuit shown in Figure 3, when input voltage is powered off or lower than battery voltage, HCR9766A will enter sleep mode. In sleep mode, the battery current includes:

(1) The current into BAT pin and CSP pin, which is about 3.6μA (V_{BAT} = 12V).

(2) The current from battery to V_{CC} pin via diode D1, which is determined by D1 leakage current. If diode D1 is not used, then the current flowing to V_{CC} pin via the inductor and body diode of the P-channel MOSFET is about 22μA (V_{BAT} = 12V).

(3) The current from battery to GND via diode D2, which is also determined by D2 leakage current.

Using P-channel MOSFET to Block Current Flowing Back from Battery

In the typical application circuit shown in Figure 3, diode D1 is used to prevent current from flowing back to V_{CC} from the battery. Due to the diode forward voltage drop, significant heat may be generated by the diode if charging current is relatively large. In this case, another P-channel MOSFET may be used to replace diode D1. As shown in Figure 5, the P-channel MOSFET M2 is used for the purpose of blocking current flowing back from the battery.

When the application circuit in Figure 5 is used, minimum input supply voltage must be higher than maximum battery voltage by at least 0.7V.

Generally, maximum V_{DS} and V_{GS} of the P-channel MOSFET M2 should be higher than maximum input voltage and maximum battery voltage, respectively. $R_{ds(on)}$ and maximum drain current of the P-channel MOSFET should meet the requirements of charge current.

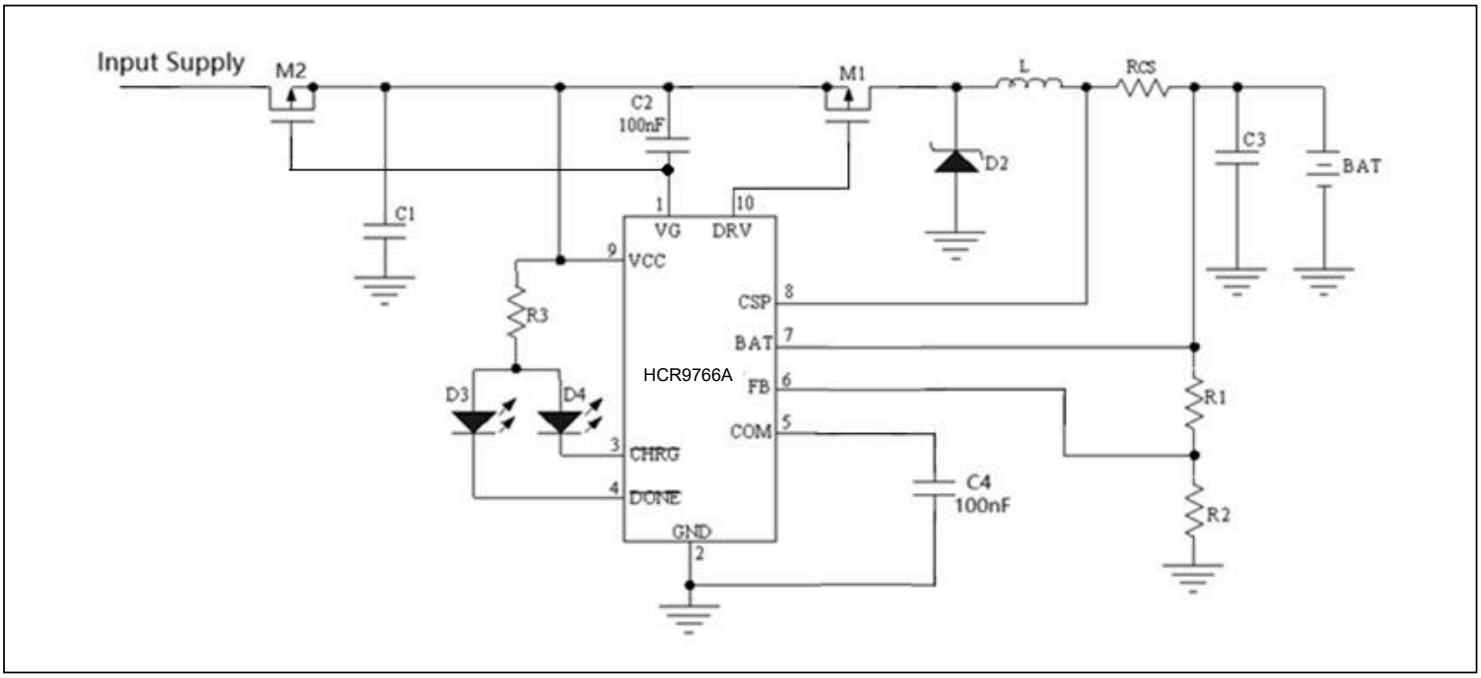

Figure 5. Using M2 to Prevent Current Flowing Back from Battery

Application Information (Continued)

About the Cases of High Input Voltage or High Battery Voltage

When input voltage or battery voltage is higher than 20V, the circuit in Figure 6 should be used to prevent possible damage by a transient voltage spike on power up or power down. In Figure 6, R_4 and C_5 are used to filter out the voltage spike at input supply, while R_5 and R_6 are used to prevent HCR9766A from being damaged by the voltage spike at the battery terminal. Where:

- R_4 is a 5.1Ω resistor with dimension 0805.
- R_5 is a 100Ω resistor with dimension 0603.
- R_6 is a 100Ω resistor with dimension 0603.
- C_5 is a 10μF ceramic capacitor with dimension 0805 or 1206.

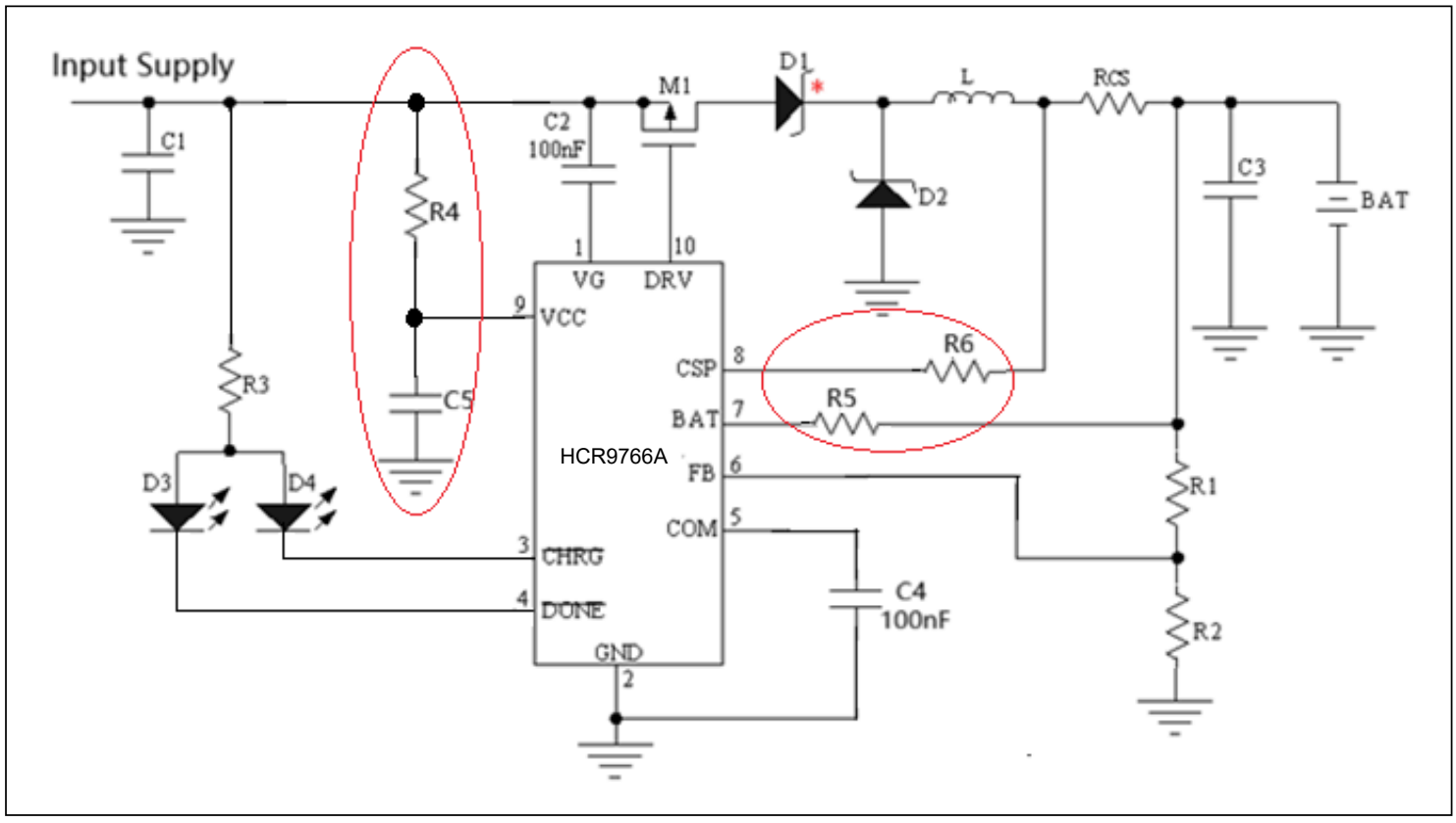

Figure 6. The Cases of High Input Supply or High Battery Voltage

Application Information (Continued)

To Suppress High-frequency Ringing

There may be high-frequency ringing at the switching node, especially with high input supply voltage or large charge current. To prevent the high-frequency ringing, a snubber circuit as shown in Figure 7 (R7 and C_7) can be used between the switching node and GND in addition to optimizing PCB design.

About Inductive Load

In some applications, the battery needs to drive inductive loads such as electric motors, boost DC-DC converters, etc. In these cases, a Schottky diode between HCR9766A BAT pin and GND is needed to prevent the device from being damaged; the diode anode should be connected to GND.

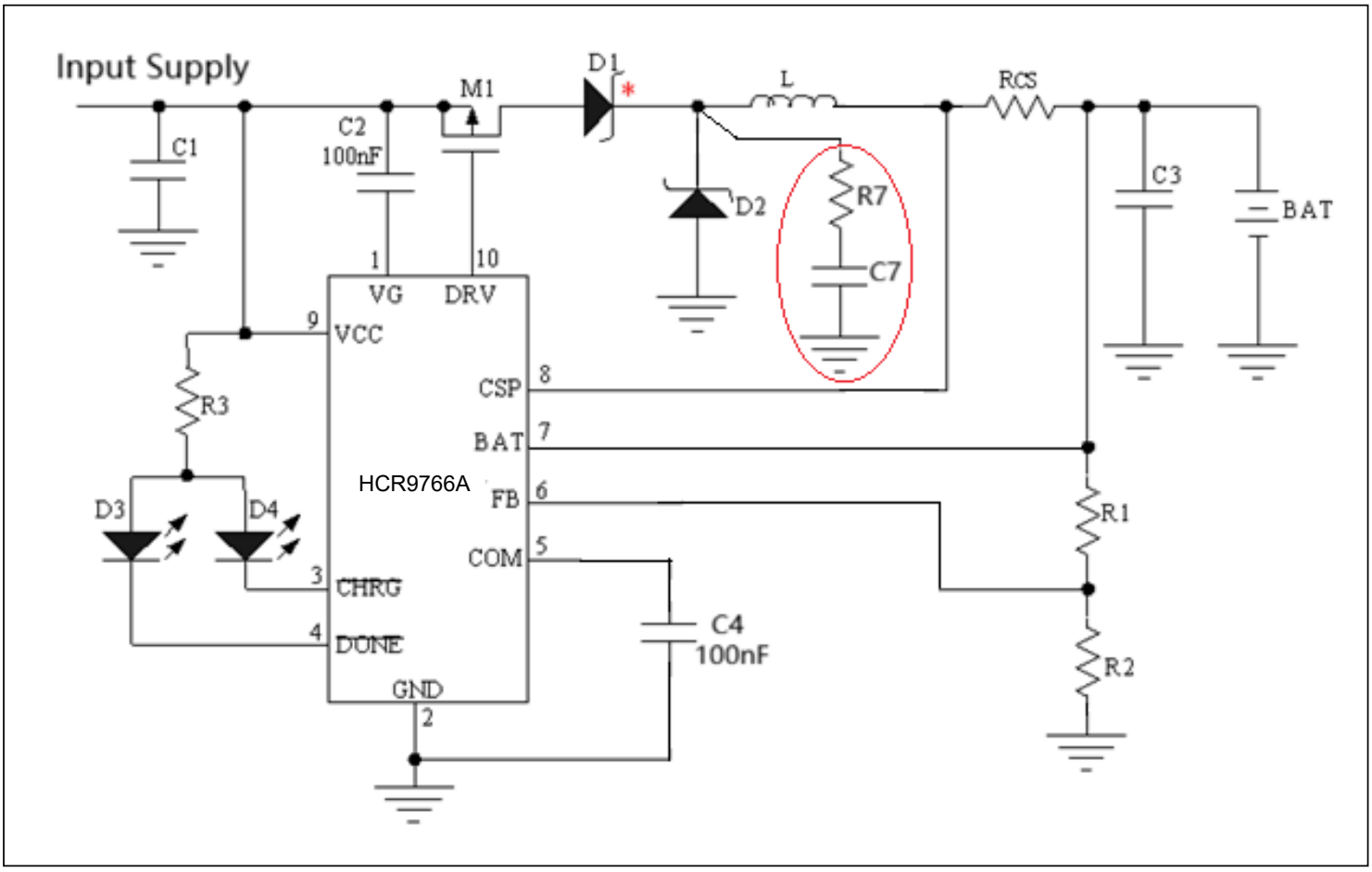

Figure 7. To Suppress High-frequency Ringing

Application Information (Continued)

PCB Layout Considerations

When laying out the printed circuit board, the following considerations should be taken to ensure proper operation of the IC.

(1) To minimize radiation, the 2 diodes, pass transistor, inductor and the input bypass capacitor traces should be kept as short as possible. The positive side of the input capacitor should be close to the source of the P-channel MOSFET; it provides the AC current to the pass transistor. The connection between the diode and the pass transistor should also be kept as short as possible.

(2) The compensation capacitor connected at the COM pin and feedback resistor at FB pin should return to the ground pin of the IC. This will prevent ground noise from disrupting the loop stability.

(3) Output capacitor ground and catch diode (D2 in Figure 3) ground connections need to feed into the same copper that connects to the input capacitor ground before tying back into system ground.

(4) Analog ground and power ground (or switching ground) should return to system ground separately.

(5) The ground pins also work as a heat sink; therefore use a generous amount of copper around the ground pins. This is especially important for high V_{CC} and/or high gate capacitance applications.

(6) Place the charge current sense resistor R_{CS} right next to the inductor output but oriented such that the IC CSP and BAT traces going to R_{CS} are not long. The 2 traces need to be routed together as a single pair on the same layer at any given time with the smallest trace spacing possible.

(7) The CSP and BAT pins should be connected directly to the 2 terminals of the current sense resistor (Kelvin sensing) for best charge current accuracy. See Figure 8 as an example.

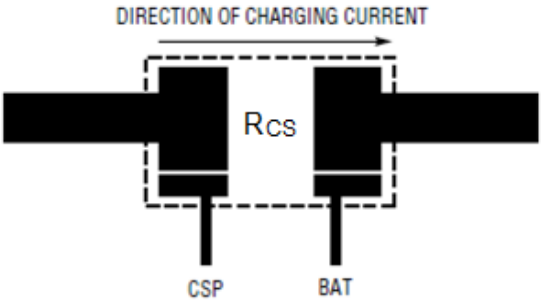

Figure 8. Kelvin Sensing of Charge Current

Package Outline Dimensions

PKG: SSOP-10

unit:mm

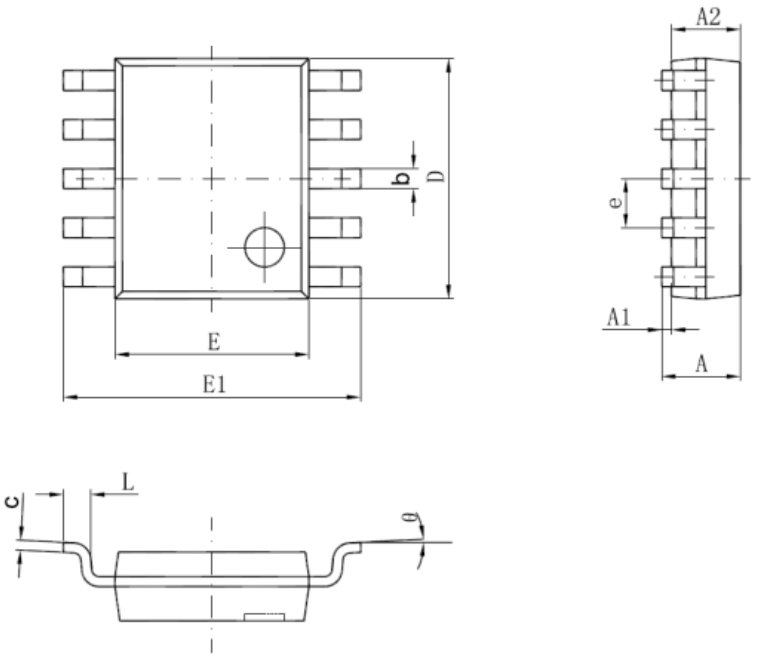

Figure 9. Package Outline Dimensions of SSOP-10

Symbol	Dimensions in Millimeters		Dimensions in Inches	
	Min.	Max.	Min.	Max.
A	1.350	1.750	0.053	0.069
A1	0.100	0.250	0.004	0.010
A2	1.350	1.550	0.053	0.061
b	0.300	0.450	0.012	0.018
c	0.170	0.250	0.007	0.010
D	4.700	5.100	0.185	0.201
E	3.800	4.000	0.150	0.157
E1	5.800	6.200	0.228	0.244
e	1.000 (BSC)		0.039 (BSC)	
L	0.400	1.270	0.016	0.050
θ	0°	8°	1°	8°

Tape and Reel Information

REEL DIMENSIONS

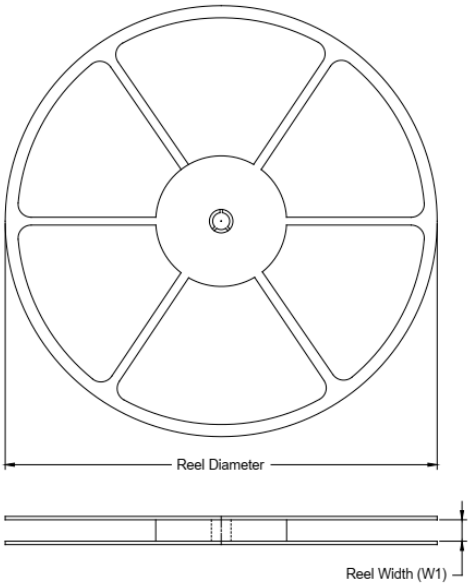

TAPE DIMENSIONS

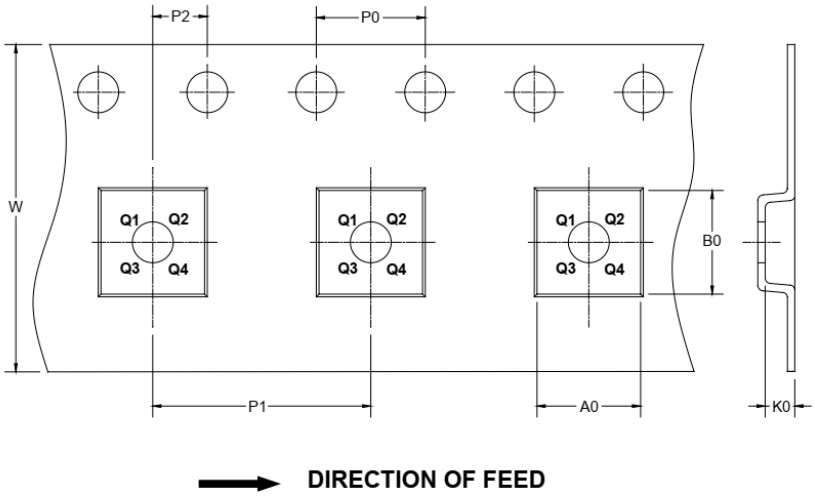

NOTE: The picture is only for reference. Please make the object as the standard.

KEY PARAMETER LIST OF TAPE AND REEL

Package Type	Reel Diameter	W1 (mm)	A0 (mm)	B0 (mm)	K0 (mm)	P0 (mm)	P1 (mm)	P2 (mm)	W (mm)	Pin1 Quadrant
SSOP-10	13”	12.4	5.20	3.30	1.60	4.0	8.0	2.0	12.0	Q1

Part Number: HCR9766A/ADJSP10TR

Packing Type: Tape and Reel

Quantity per Reel: 3000 pcs

Conditions of Soldering and Storage

Recommended condition of reflow soldering

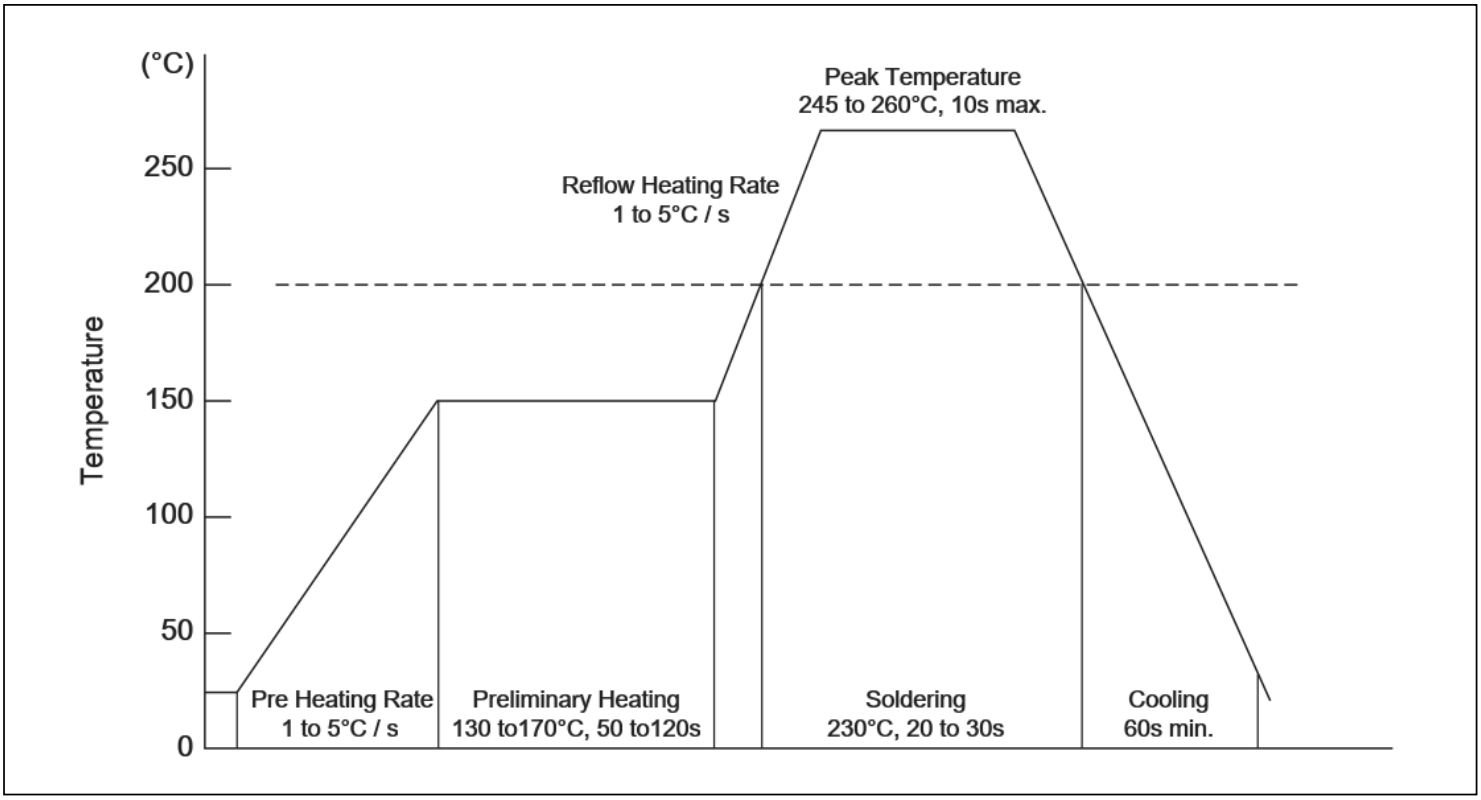

Recommended peak temperature is over 245°C. If peak temperature is below 245°C, you may adjust the following parameters:

- Time length of peak temperature (longer)
- Time length of soldering (longer)
- Thickness of solder paste (thicker)

Conditions of Hand Soldering

- Temperature: 300°C
- Time: 3s max
- Times: one time

Storage Conditions

- Temperature: 5 to 40°C
- Humidity: 30 to 80% RH
- Recommended period: one year after manufacturing